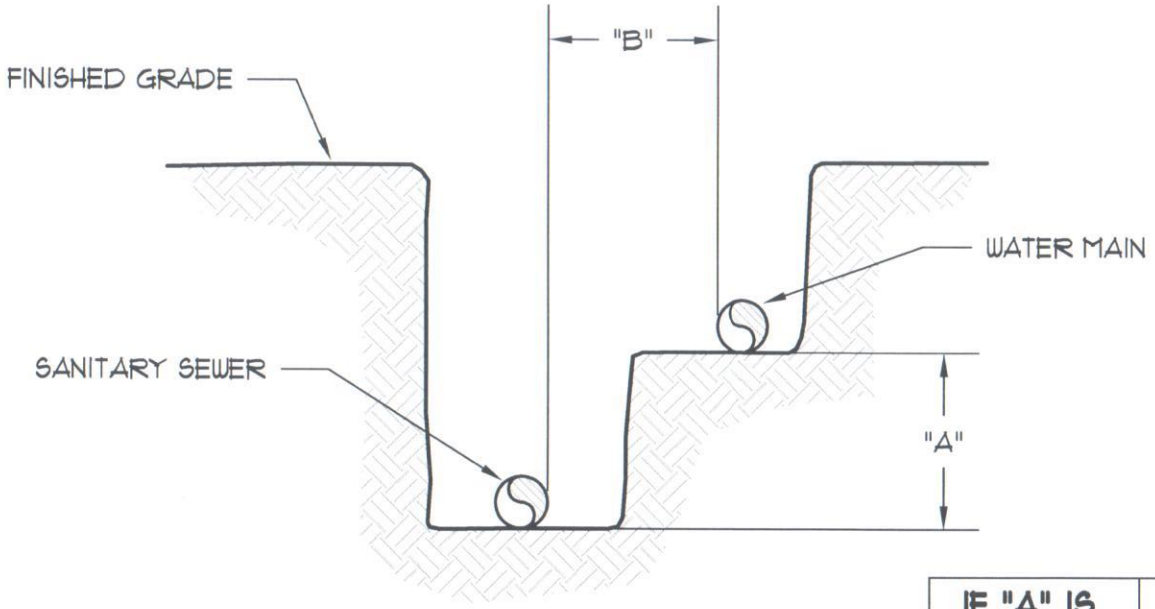


**NOTES:**

1. SEPARATION DISTANCES FROM WATER SUPPLIES AND PIPE CLASSIFICATIONS SHALL CONFORM TO INDIANA STATE BOARD OF HEALTH'S "ON-SITE WATER SUPPLY AND WASTEWATER DISPOSAL FOR PUBLIC AND COMMERCIAL ESTABLISHMENTS - BULLETIN S.E. 13"
2. WATER MAINS SHALL BE LOCATED ON AN UNDISTURBED LEDGE.

| IF "A" IS | IF "B" IS | THEN SANITARY SEWER PIPE SEGMENT SHALL BE |
|---|---|---|
| 18" OR MORE | 10' OR MORE | NO SPECIAL PIPE MATERIAL OR GRADE REQUIREMENTS |
| LESS THAN 18" | LESS THAN 10' | PVC (EITHER ASTM D2241 (SDR 21)) OR ANSI/AWWA C900 (DR 18) OR ANSI/AWWA C905 (DR 21) OR DUCTILE IRON (CLASS 51 MIN.) |

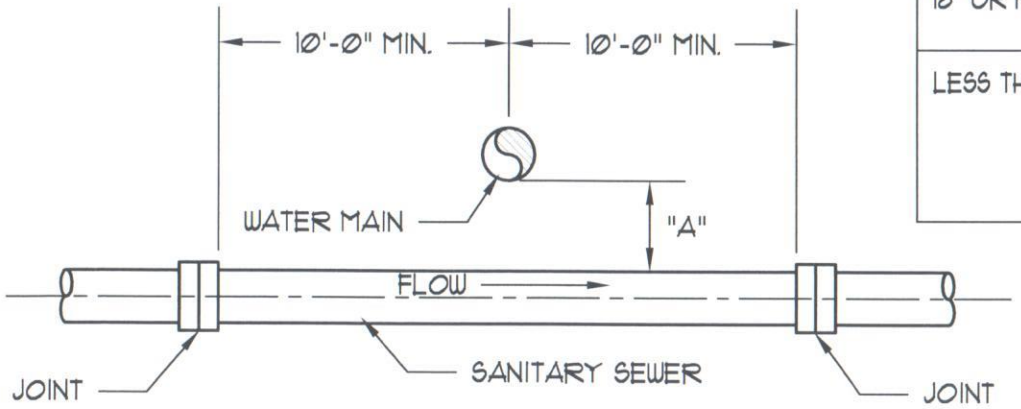


City of Carmel Utilities
STANDARD DETAILS

TITLE:
WATER LINE CROSSING DETAIL

DATE: September 2012
DRAWING: CS32

SCALE: Not To Scale

DRAWN BY: Jones & Henry Engineers, Ltd.
FORT WAYNE, INDIANA