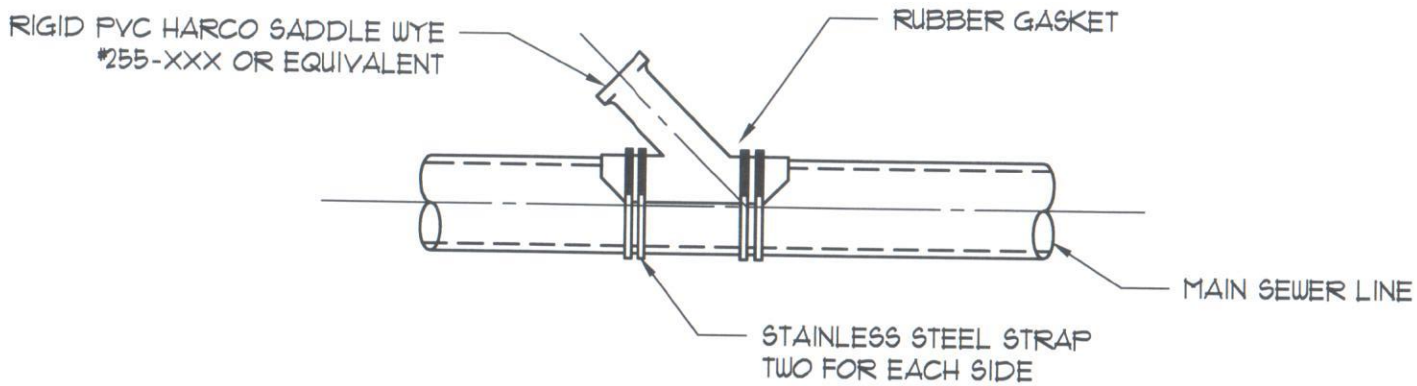

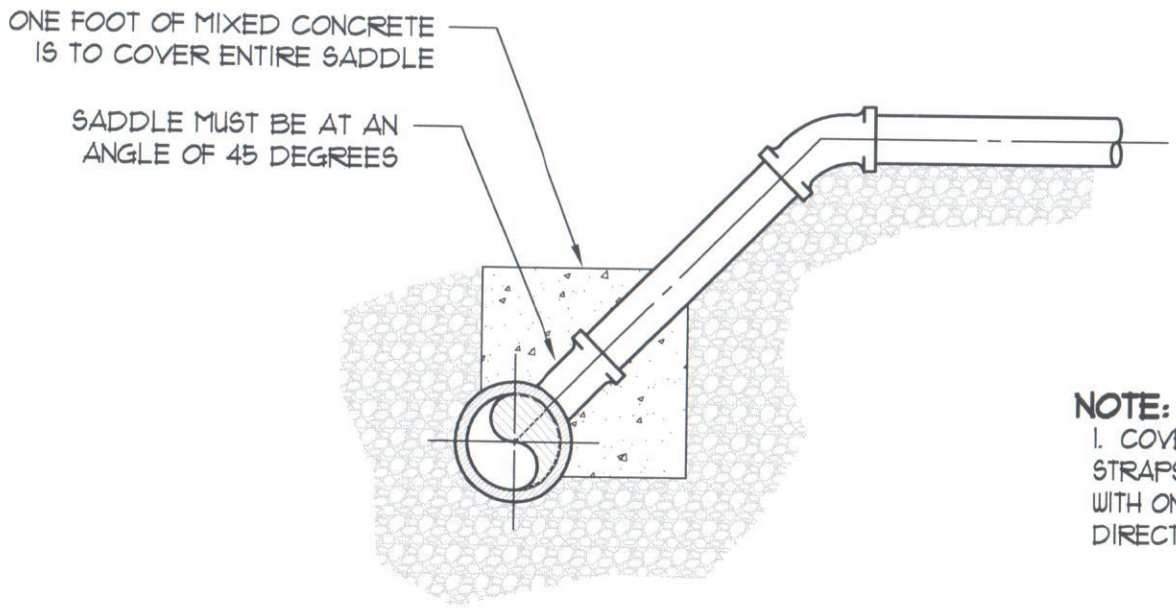

NOTE:

1. COVER FITTING AND STAINLESS STEEL STRAPS WITH PLASTIC WRAP AND ENCASE WITH ONE FOOT OF MIXED CONCRETE IN ALL DIRECTIONS.

City of Carmel Utilities STANDARD DETAILS		TITLE: SADDLE TEE DETAIL
DATE: September 2012 DRAWING: CS34	SCALE: Not To Scale	DRAWN BY: Jones & Henry Engineers, Ltd. FORT WAYNE, INDIANA