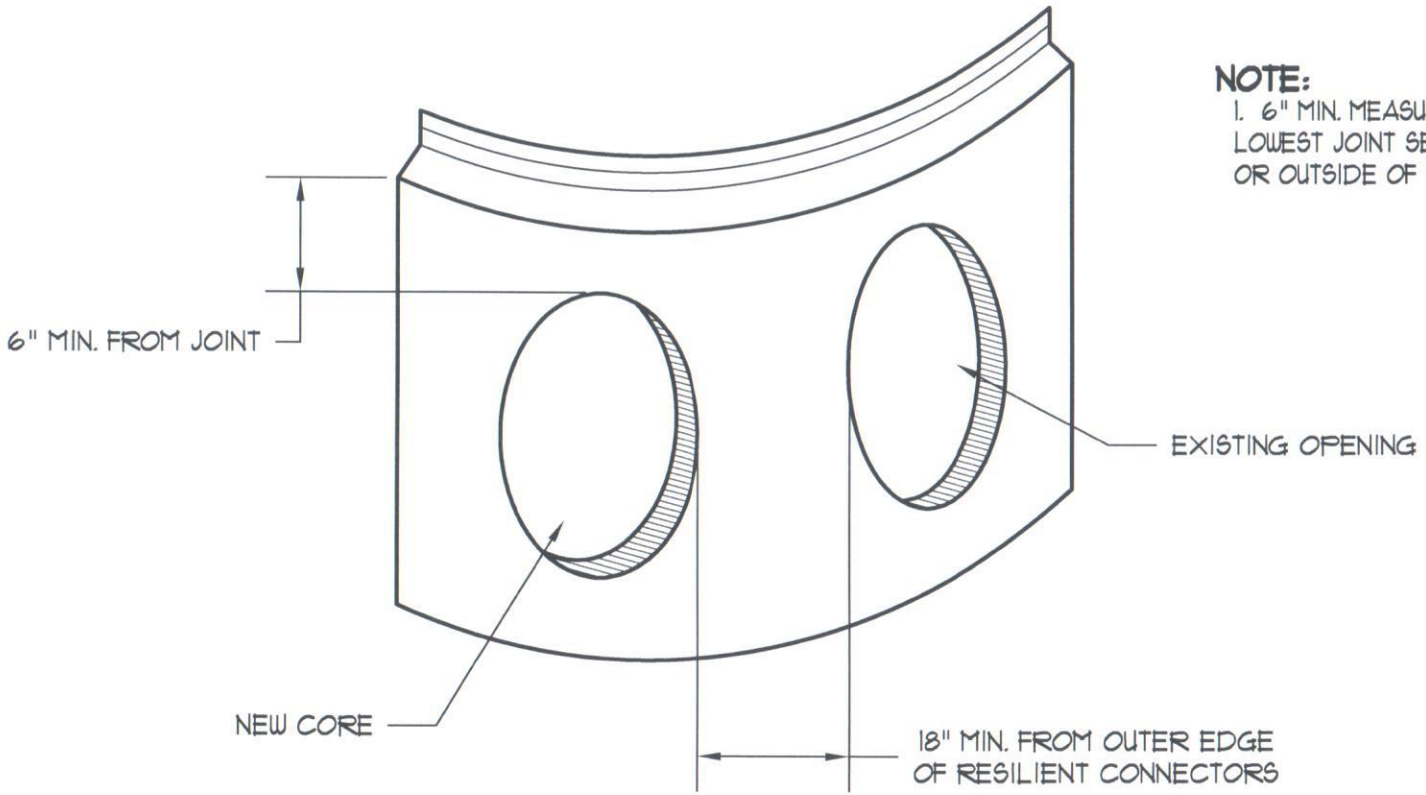

NOTE:

1. 6" MIN. MEASUREMENT MUST BE FROM LOWEST JOINT SEAM WHETHER ON THE INSIDE OR OUTSIDE OF THE STRUCTURE.

City of Carmel Utilities STANDARD DETAILS		TITLE: NEW CORE DETAIL
DATE: September 2012 DRAWING: CS36	SCALE: Not To Scale	DRAWN BY: Jones & Henry Engineers, Ltd. FORT WAYNE, INDIANA