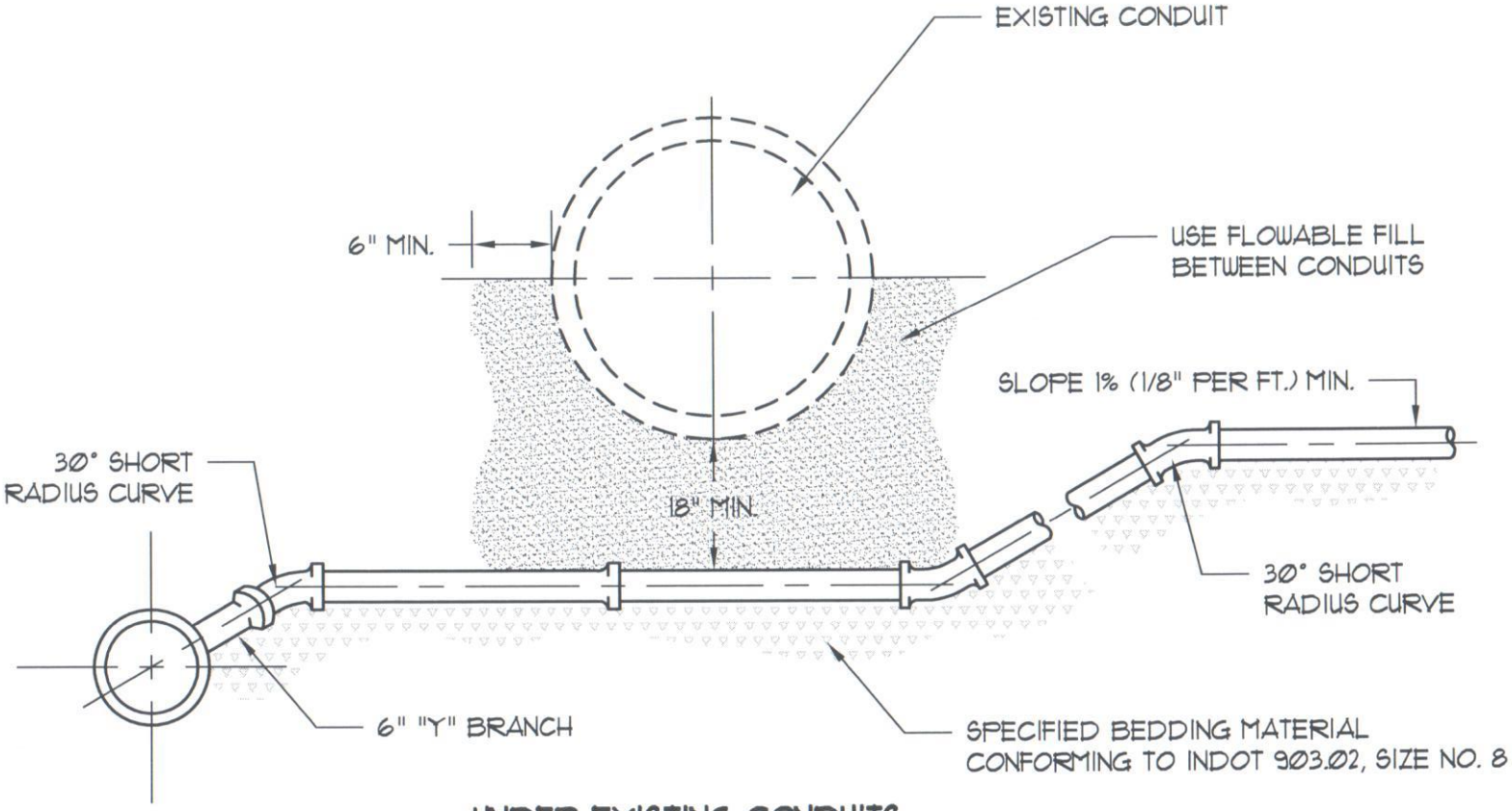

UNDER EXISTING CONDUITS

City of Carmel Utilities STANDARD DETAILS		TITLE: HOUSE CONNECTION DETAIL
DATE: December 2011 DRAWING: CS12	SCALE: Not To Scale	DRAWN BY: Jones & Henry Engineers, Ltd. FORT WAYNE, INDIANA