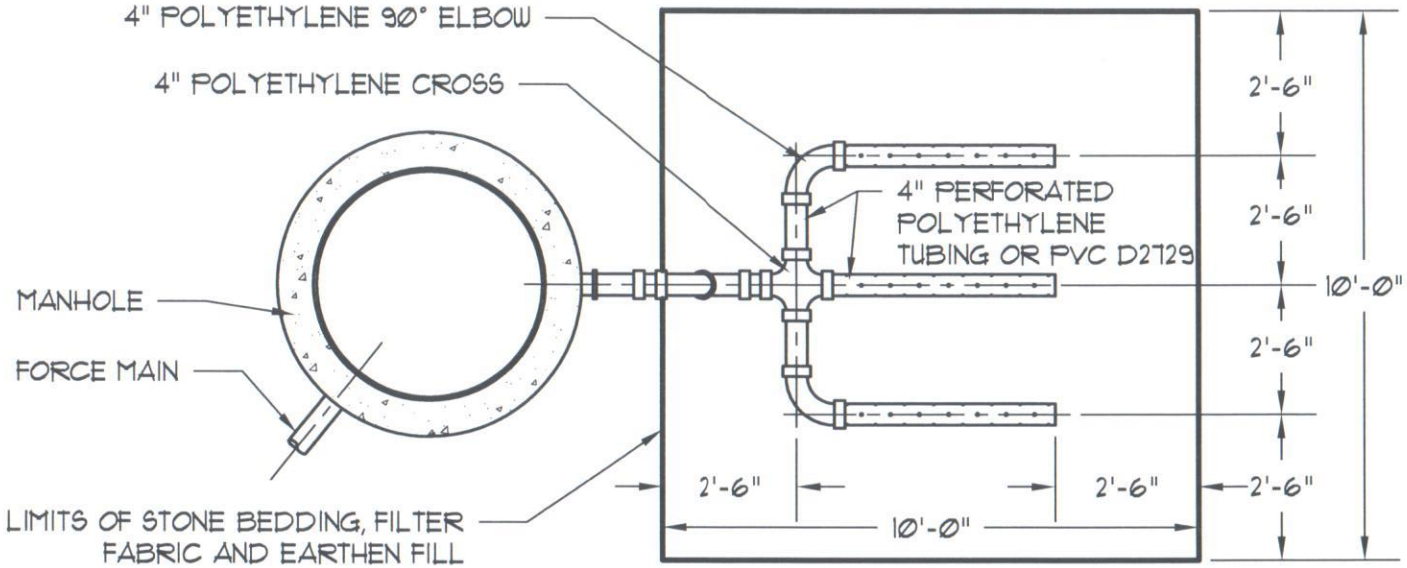

PLAN VIEW

NOTES:

1. TO BE USED FOR FORCE MAINS WITH A DISCHARGE PIPE OF 4" OR SMALLER OR ATTACHED TO CLOSED BOTTOM AIR/VACUUM RELEASE MANHOLES.

2. ORIENT SO THAT FILTER IS LOCATED WITHIN SANITARY SEWER EASEMENT.

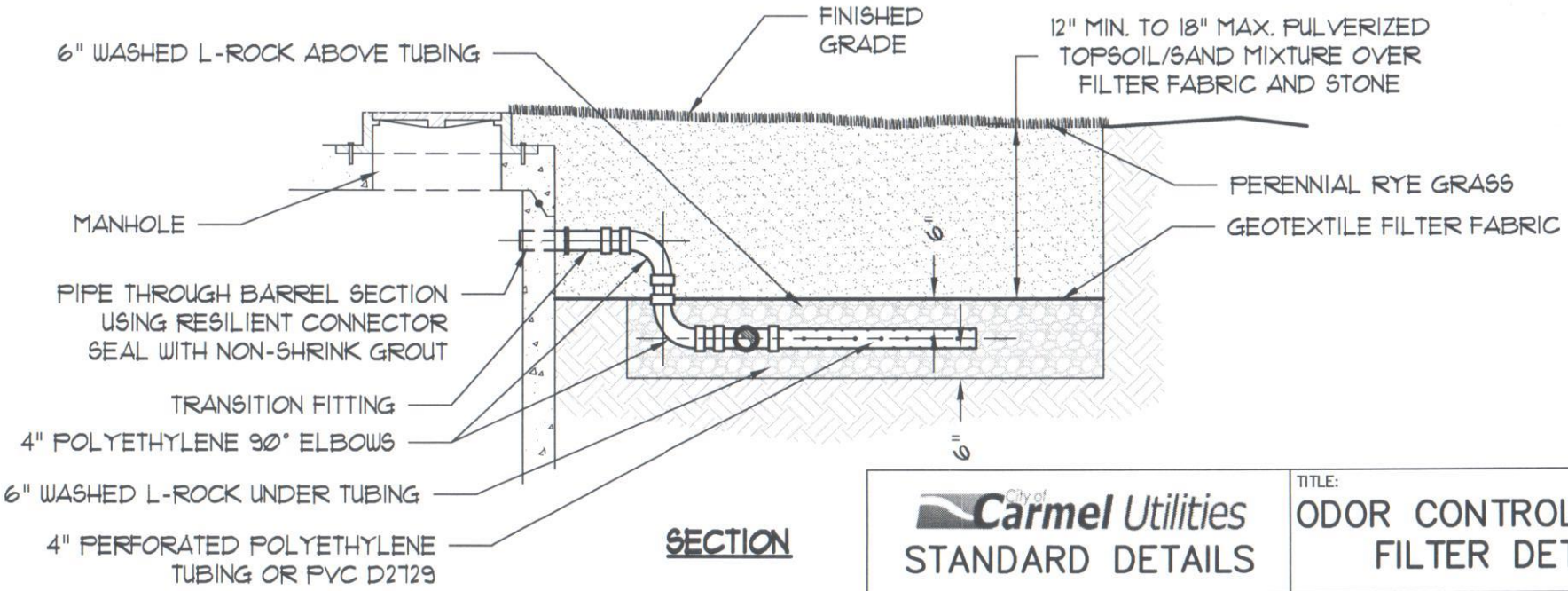

SECTION

City of Carmel Utilities STANDARD DETAILS		TITLE: ODOR CONTROL EARTH FILTER DETAIL
DATE: September 2012 DRAWING: CS29	SCALE: Not To Scale	DRAWN BY: Jones & Henry Engineers, Ltd. FORT WAYNE, INDIANA