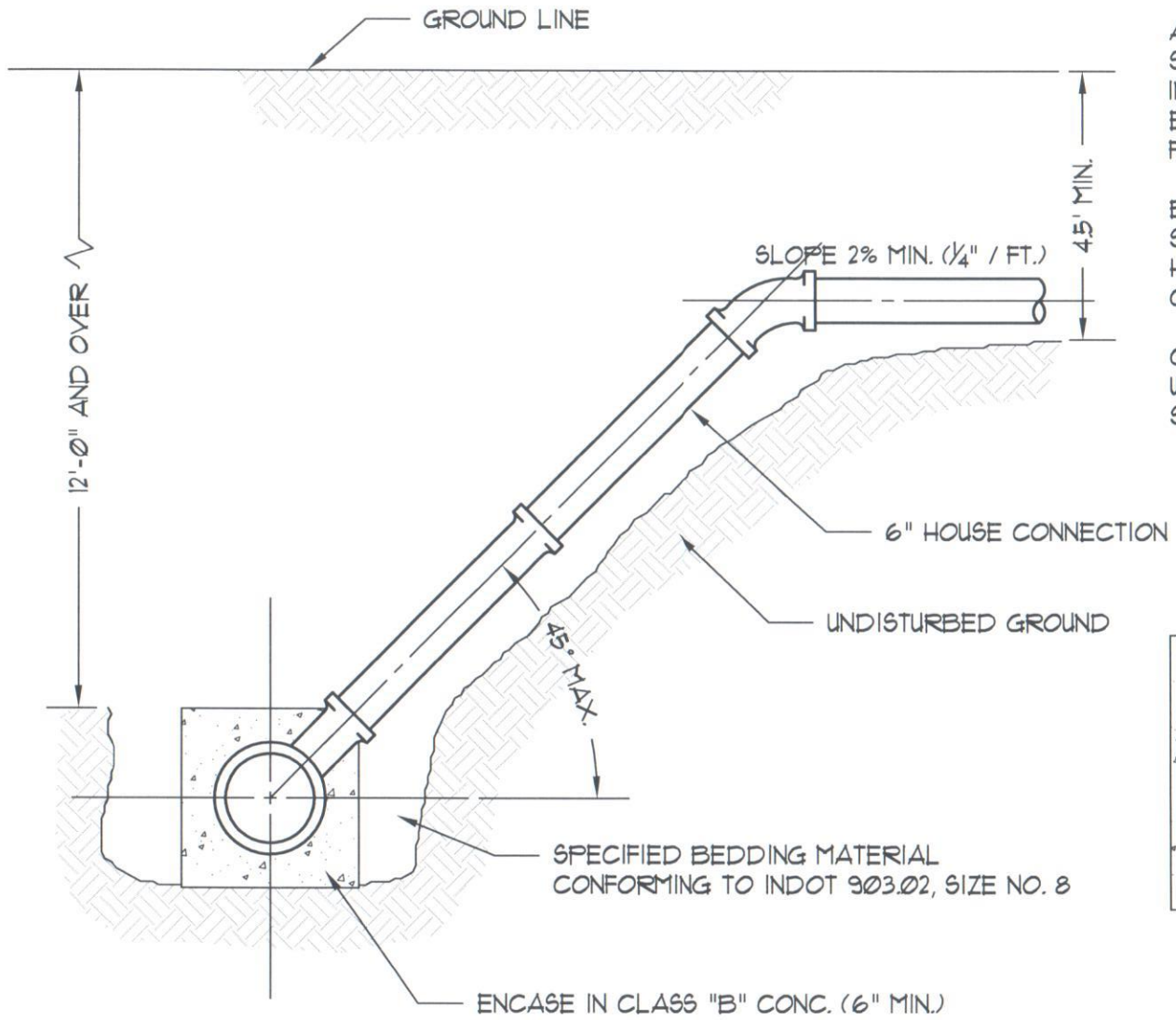

SECTION

SERVICE CONNECTION NOTES

A. CONTRACTOR SHALL NOT BACKFILL SERVICE CONNECTION UNTIL THE CITY HAS INSPECTED AND TAKEN MEASUREMENTS, ELEVATIONS & OTHER INFORMATION REQUIRED FOR PURPOSES OF RECORD.

B. ALL TEE AND WYE BRANCHES IN THE MAIN SEWER LINE ROTATED MORE THAN 30° FROM HORIZONTAL SHALL BE ENCASED IN 6" MIN. CLASS "B" CONCRETE.

C. TEE BRANCHES MAY BE USED IN LIEU OF WYE BRANCHES FOR CONNECTIONS TO MAIN SEWERS 18" AND LARGER.

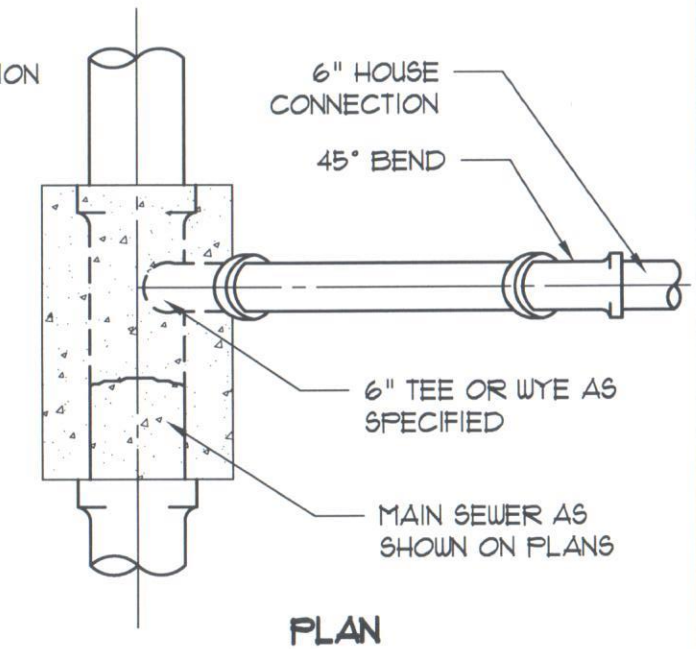

PLAN

TO BE USED WHERE MAIN SEWER IS MORE THAN 12' IN DEPTH

City of Carmel Utilities STANDARD DETAILS		TITLE: HOUSE CONNECTION TYPE 2
DATE: December 2011 DRAWING: CS16	SCALE: Not To Scale	DRAWN BY: Jones & Henry Engineers, Ltd. FORT WAYNE, INDIANA