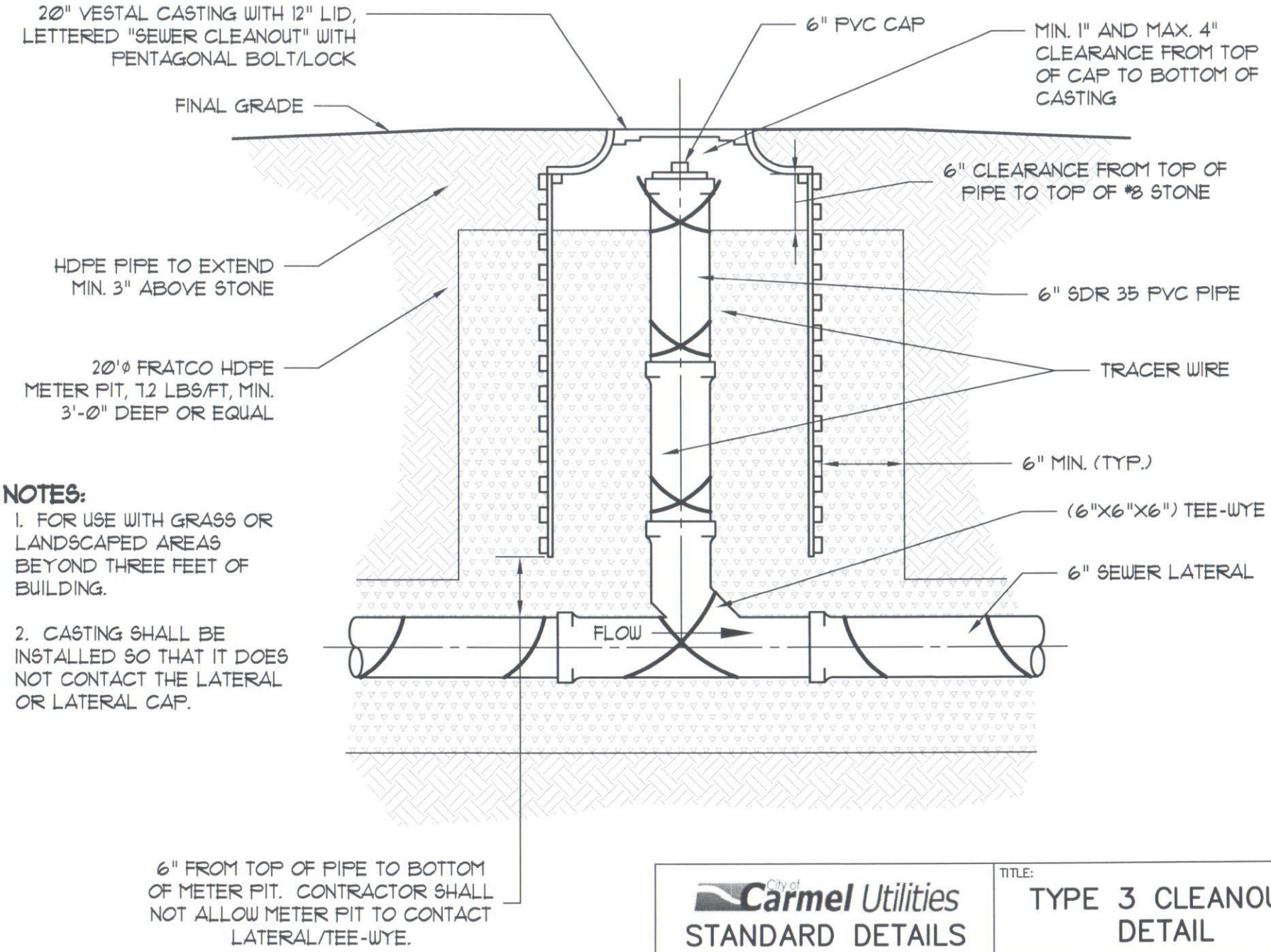

NOTES:

1. FOR USE WITH GRASS OR LANDSCAPED AREAS BEYOND THREE FEET OF BUILDING.

2. CASTING SHALL BE INSTALLED SO THAT IT DOES NOT CONTACT THE LATERAL OR LATERAL CAP.

City of Carmel Utilities STANDARD DETAILS		TITLE: TYPE 3 CLEANOUT DETAIL
DATE: September 2012 DRAWING: CS20	SCALE: Not To Scale	DRAWN BY: Jones & Henry Engineers, Ltd. FORT WAYNE, INDIANA