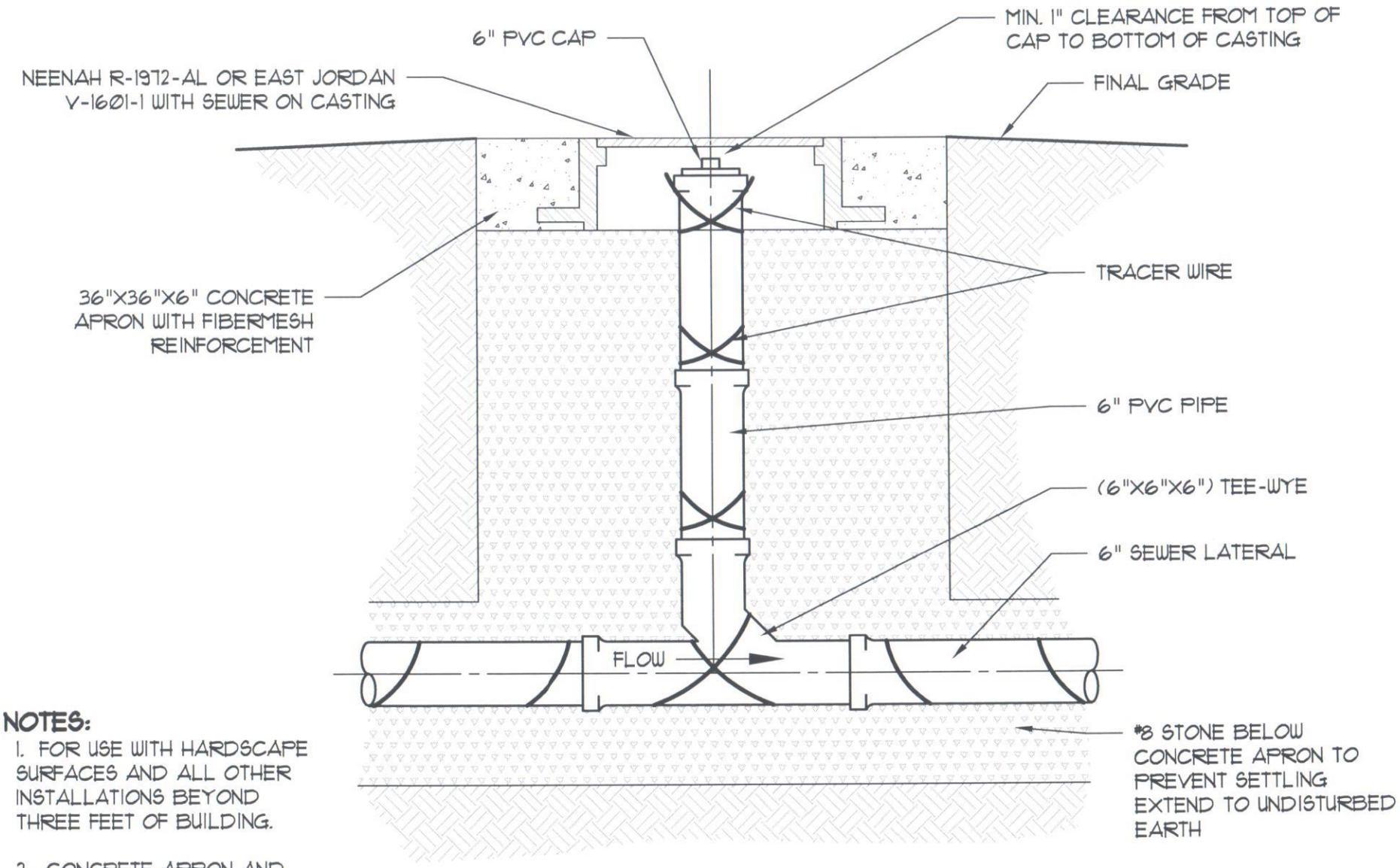

NOTES:

1. FOR USE WITH HARDSCAPE SURFACES AND ALL OTHER INSTALLATIONS BEYOND THREE FEET OF BUILDING.

2. CONCRETE APRON AND CASTING SHALL BE INSTALLED SO THAT THEY DO NOT CONTACT THE LATERAL OR LATERAL CAP.

City of Carmel Utilities STANDARD DETAILS		TITLE: TYPE 2 CLEANOUT DETAIL
DATE: September 2012 DRAWING: CS19	SCALE: Not To Scale	DRAWN BY: Jones & Henry Engineers, Ltd. FORT WAYNE, INDIANA