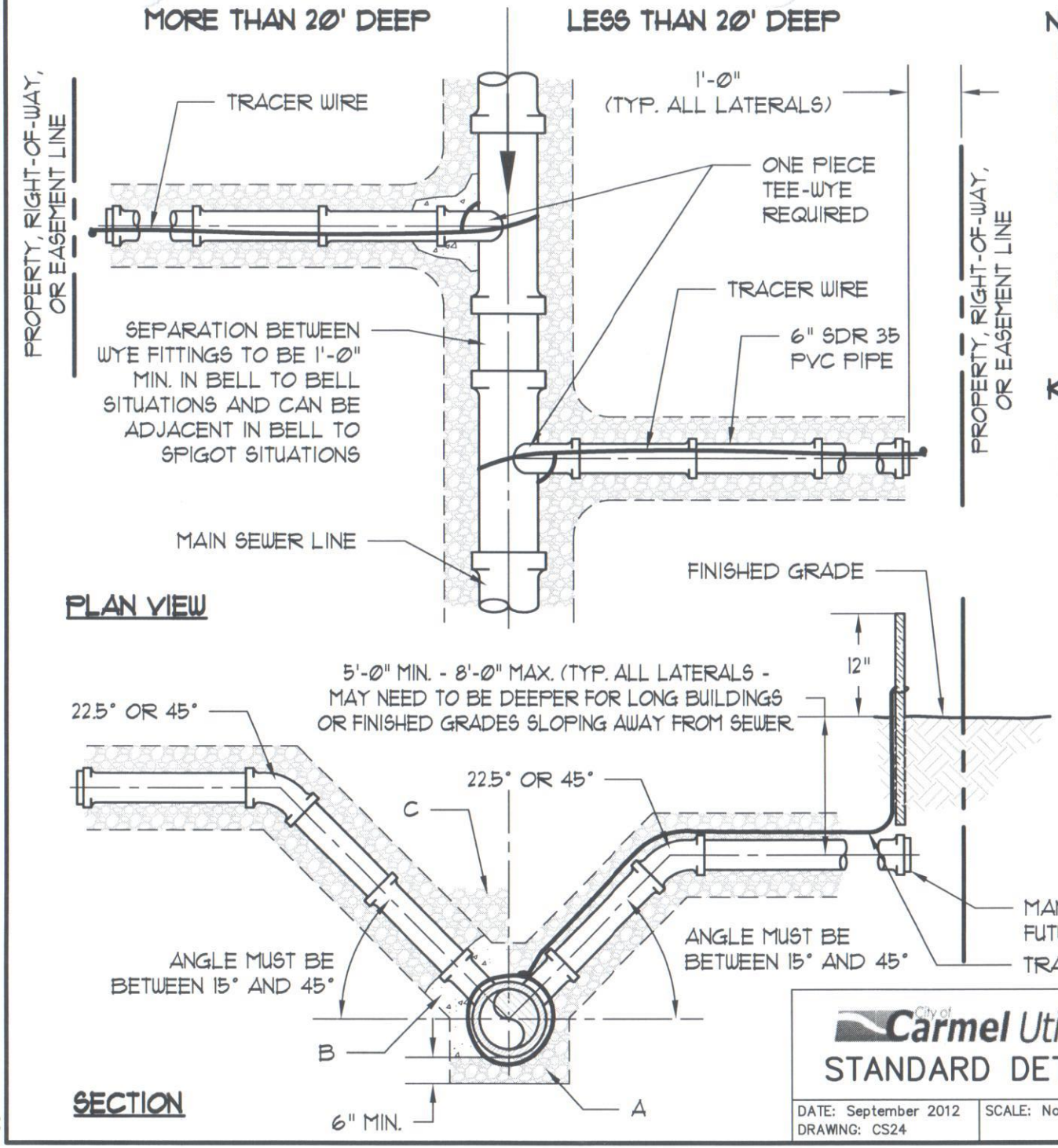


## NOTES:

1. ALL FITTINGS SHALL BE SDR 26.
2. DEPTH OF SERVICE LATERAL SHALL BE MEASURED FROM FINISHED GRADE TO THE TOP OF MAIN SEWER LINE.
3. ALL LATERAL BEDDING SHALL BE AGAINST UNDISTURBED TRENCH.
4. MINIMUM FALL IS 1/8" PER FOOT, TYPICAL OF ALL LATERALS.
5. PIPE REQUIREMENTS PER DEPTH ARE AS FOLLOWS:

| | |
|---|---|
| 3'-19' | SDR-35 |
| 20'-25' | SDR-26 |
| OVER 25' | SDR-23.5 |

## KEYNOTES:

A. BEDDING TO BE PLACED ON UNDISTURBED EARTH. COMPACTION OF #8 STONE IS CRITICAL UNDER ALL JOINTS AND FITTINGS. IF PROPER COMPACTION CANNOT BE ACHEIVED, THEN PLACE A MINIMUM OF 6" OF 3500 PSI, 28 DAY COMPRESSIVE STRENGTH CONCRETE AROUND THE PIPE TO BEAR ON STABLE GROUND (PER ENGINEER).

B. MINIMUM 4" CONCRETE CAP REQUIRED, NOT TO EXCEED BEYOND FIRST PIPE JOINT OF WYE. IF WYE IS 20' DEEP, THEN CONCRETE CAP IS REQUIRED AT ENGINEERS DISCRETION. MIN. 3500 PSI, 28 DAY COMPRESSIVE STRENGTH CONCRETE REQUIRED. NOT REQUIRED FOR DUCTILE IRON TEE.

C. MIN. OF 8" OF #8 STONE OVER THE CONCRETE CAPPED WYE SHALL BE PLACED PRIOR TO BACKFILLING.

City of Carmel Utilities
STANDARD DETAILS

TITLE: SERVICE LATERAL DETAIL

DATE: September 2012
DRAWING: CS24
SCALE: Not To Scale
DRAWN BY: Jones & Henry Engineers, Ltd. FORT WAYNE, INDIANA