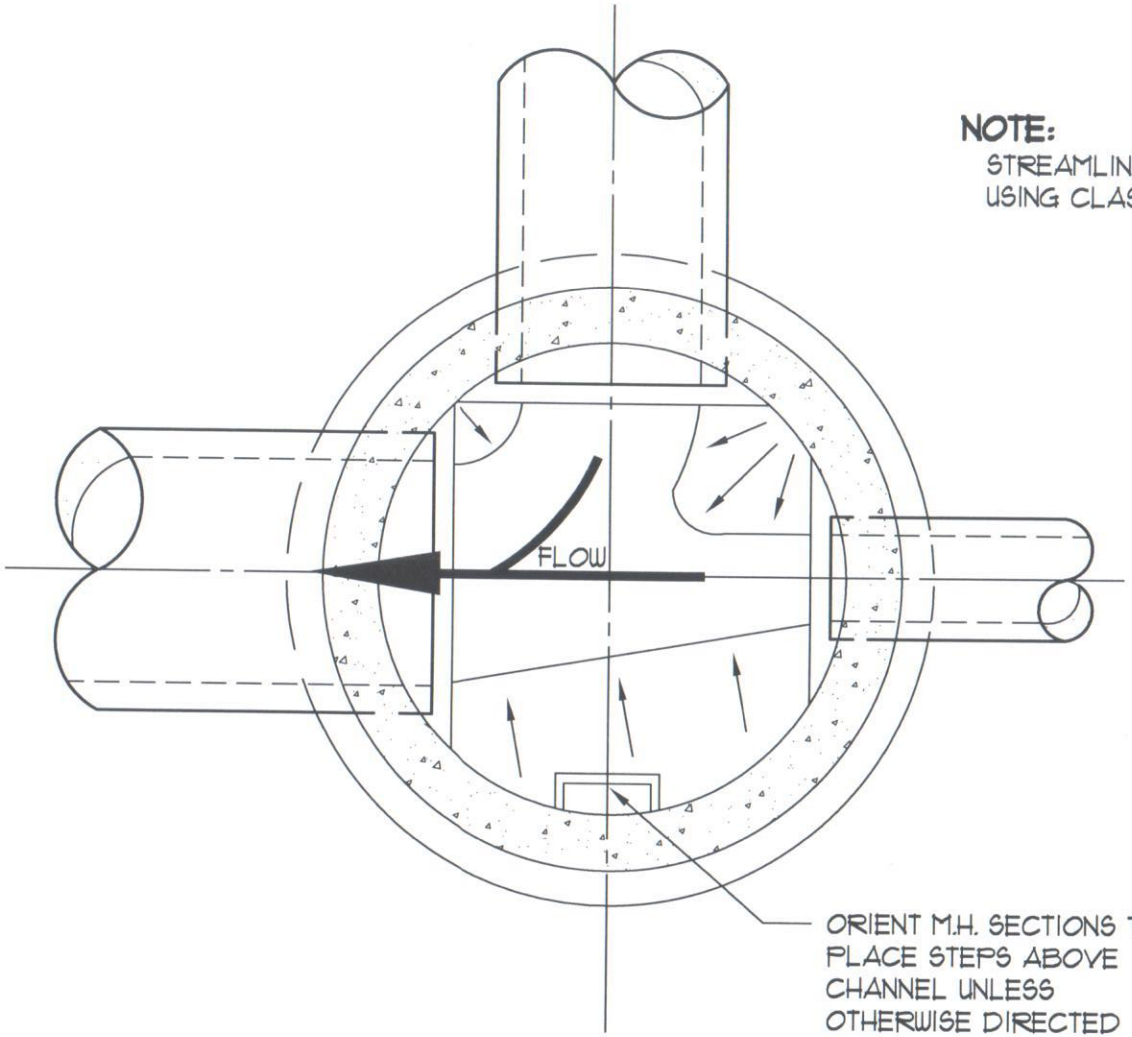

NOTE:
STREAMLINE ALL CHANNELS
USING CLASS 'A' CONCRETE

ORIENT M.H. SECTIONS TO
PLACE STEPS ABOVE
CHANNEL UNLESS
OTHERWISE DIRECTED

City of Carmel Utilities STANDARD DETAILS		TITLE: TYPICAL BENCHWALL DETAIL
DATE: December 2011 DRAWING: CS8	SCALE: Not To Scale	DRAWN BY: Jones & Henry Engineers, Ltd. FORT WAYNE, INDIANA