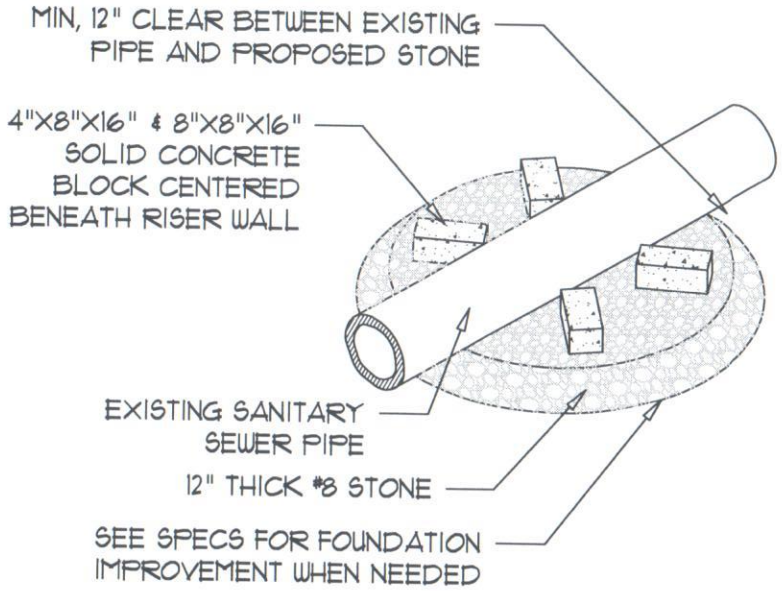

BASE ISOMETRIC VIEW

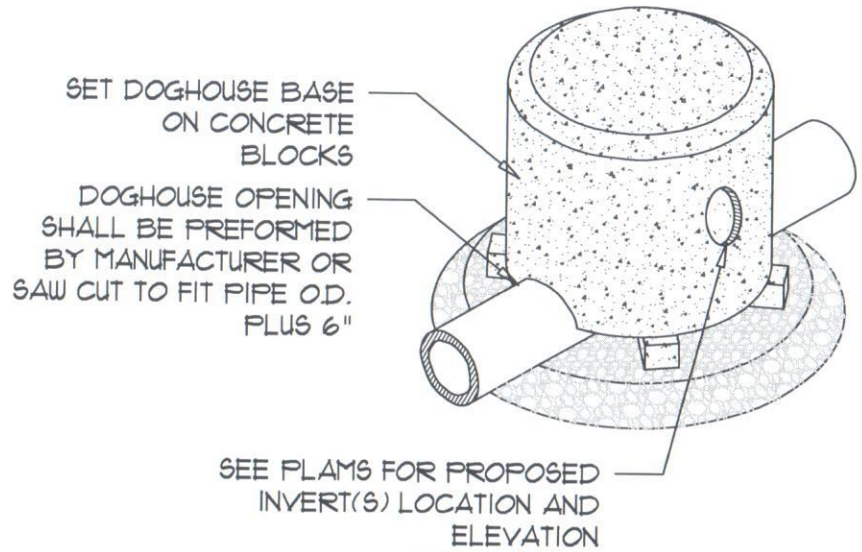

RISER ISOMETRIC VIEW

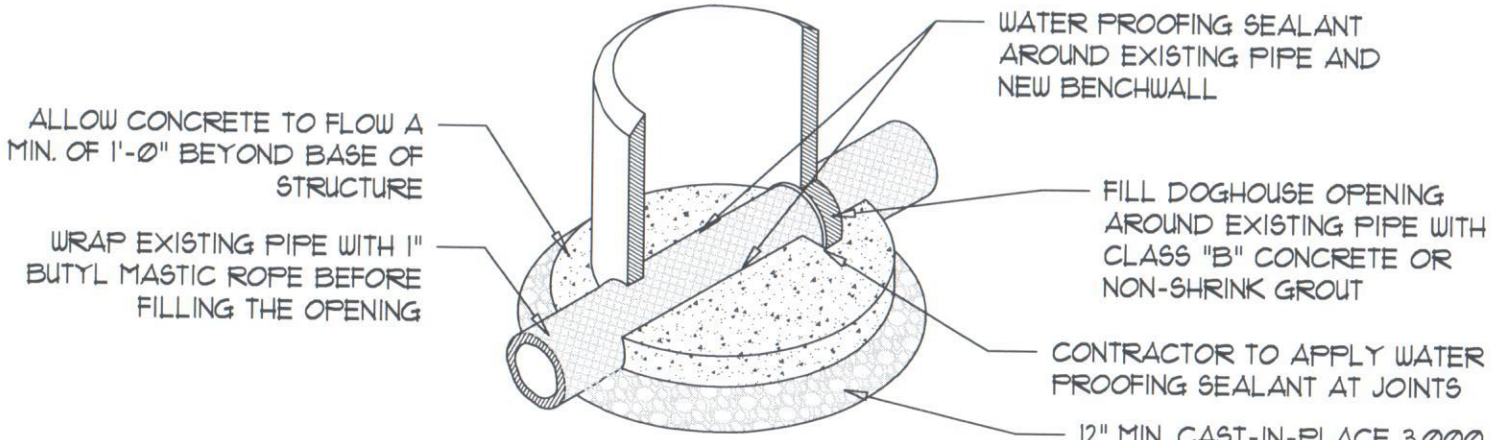

FOUNDATION ISOMETRIC VIEW

STANDARD DETAILS		TITLE: DOGHOUSE MANHOLE ISOMETRIC DETAIL
DATE: September 2012 DRAWING: CS40	SCALE: Not To Scale	DRAWN BY: Jones & Henry Engineers, Ltd. FORT WAYNE, INDIANA