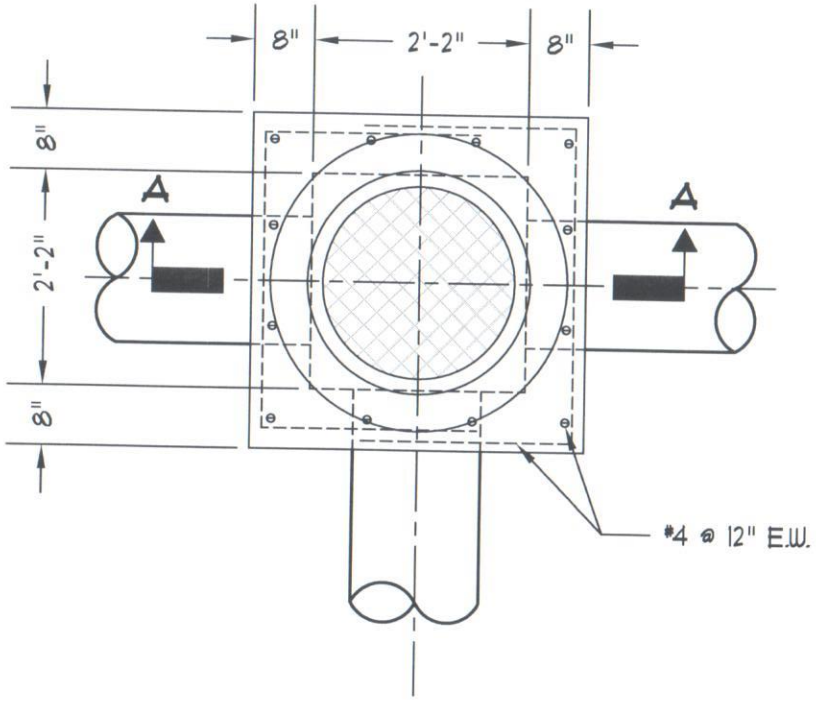

PLAN

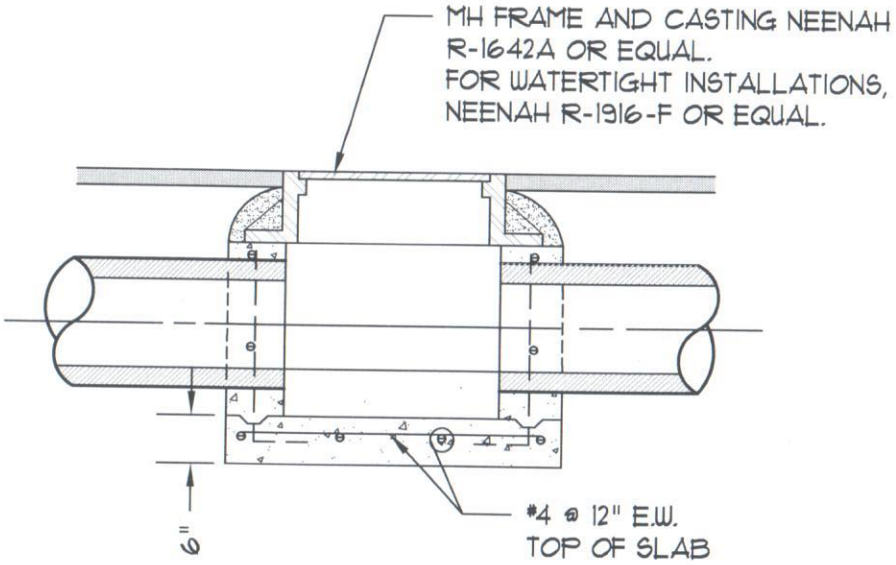

SECTION A-A

City of Carmel Utilities STANDARD DETAILS		TITLE: TYPE IV MANHOLE
DATE: December 2011 DRAWING: CS6	SCALE: Not To Scale	DRAWN BY: Jones & Henry Engineers, Ltd. FORT WAYNE, INDIANA