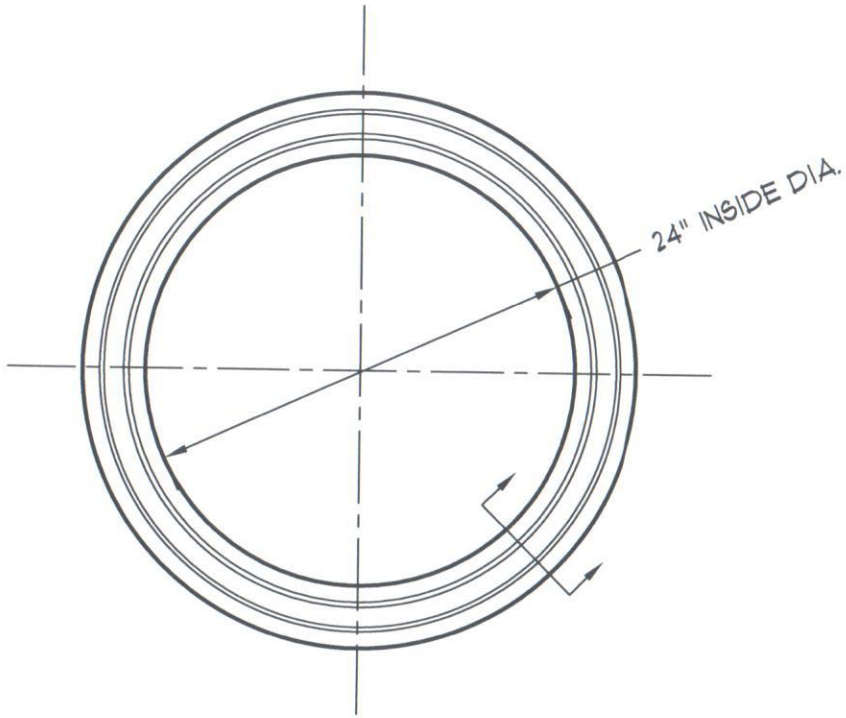

PLAN

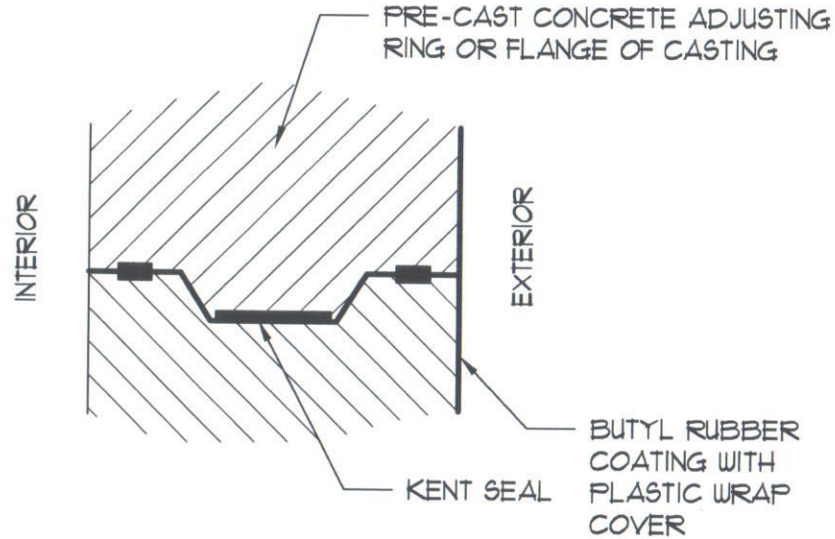

JOINT DETAIL

RISER RING THICKNESS 4" - 12"
OUTSIDE DIA. 34" OR 36"

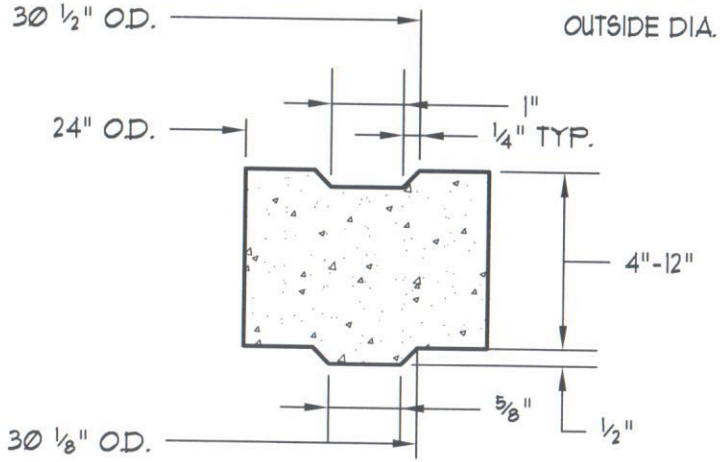

SECTION

City of Carmel Utilities
STANDARD DETAILS

TITLE: ADJUSTING RING DETAIL

DATE: September 2012
DRAWING: CS37

SCALE: Not To Scale

DRAWN BY: Jones & Henry Engineers, Ltd.
FORT WAYNE, INDIANA