Carmel Standard Drawings

10-1 Typical Section - Primary Arterial
10-2 Typical Section - Primary Parkway
10-3 Typical Section - Urban Arterial
10-4 Typical Section - Arterial
10-5 Typical Section - Parkway Arterial
10-6 Typical Section - Urban Collector
10-7 Typical Section - Collector
10-8 Typical Section - Parkway Collector
10-9 Typical Section - Local Street
10-10A Typical Section - Alley
10-10B Typical Section - Porous/Permeable Alley
10-11A Decorative Street Signage Detail
10-11B Decorative Blade Detail
10-11C Non-decorative Street Signage Detail
10-12 Underdrain
10-13 Concrete Roll Curb & Gutter
10-14 Curb & Gutter Concrete Type II
10-15 Curb & Gutter Concrete Type III
10-16 Straight Concrete Curb
10-17 Curb & Gutter B, Concrete, Modified
10-18 Typical - Sidewalk Detail
10-19 Sidewalk Adjacent To Curb
10-20 Multi-Use Path
10-21A Residential Driveway - Depressed Curb
10-21B Residential Driveway - Concrete Roll Curb & Gutter
10-22 Commercial Driveway - Depressed Curb
10-23 Depressed Curb & Gutter Detail
10-24 Multi Use Path and Street Cut Repair Detail
10-25A Roundabout Truck Apron Detail
10-25B DELETED (see 10-51 and 10-52)
10-25C Roll Curb for Truck Apron
10-25D Barrier Curb at RAB Truck Apron Detail
10-26 Subdivision Cul-de-sac A
10-27 Subdivision Cul-de-sac B
10-28 Install Curb Adjacent to Existing Pavement
10-29A Typical SSD Lateral to Individual Lots In Rear Yard
10-29B Typical SSD Lateral to Individual Lots Under Concrete Curb
10-30 Typical Swale Details
10-31 Trench Detail for City Storm Sewers
10-32 Water & Sewer Main & Lateral Trench Detail for Utility Installations within The City R/W
10-33 Standard Intersection
10-34 Median Island at Subdivision or Commercial Entrance
10-35 Auxiliary Lanes & Major Road Improvements
10-36 Auxiliary Lanes for Left Turn Bay
10-37A Handrail
10-37B Handrail Base Plate Detail
10-38 Concrete Curb End Treatment Delineation
10-39 Fire Hydrant Marker Placement
10-40 Service and Control Cabinet Detail
10-41 Service and Control Cabinet Interior Detail
10-42A 15' Light Pole Foundation Detail
10-42B 15' Light Pole and Luminare
10-42C Deco Wrap Base
10-42D Deco Wrap Base Detail
10-43A 30' Light Pole Foundation Detail
10-43B 30' Light Pole and Luminare
10-43C Deco Wrap Base
10-43D Deco Wrap Base Detail
10-44 Conduit/Inner Duct Detail
10-45 Rapid Flashing Beacon
10-46 Tree Planting detail - Deciduous Tree
10-47 Tree Planting Detail - Coniferous Tree
10-48 Shrub Planting Detail
10-49 Standard Roundabout Design - General Notes
10-50 Standard Roundabout Design - Miscellaneous Details
10-51 Standard Roundabout Design - Single Lane Details
10-52 Standard Roundabout Design - Multi-Lane Details
10-53 Standard Roundabout Design - Roundabout Lighting

CITY OF CARMEL STANDARDS

INDEX

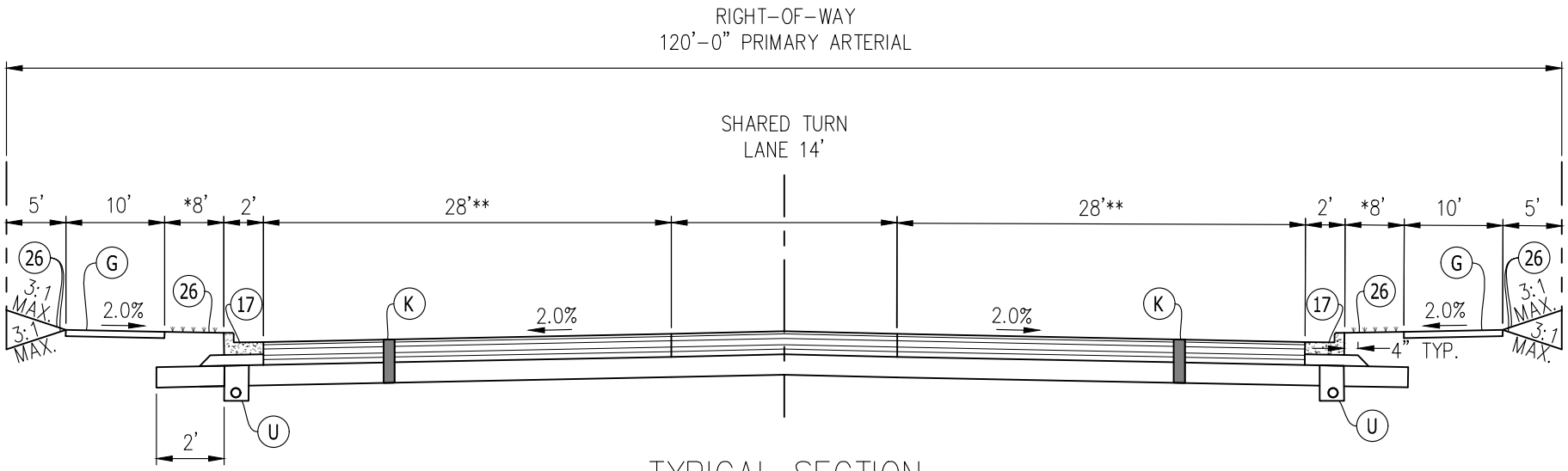

TYPICAL SECTION
PRIMARY ARTERIAL

NO SCALE

LEGEND

(K) HMA PAVEMENT***
1.5" – 165#/SYD. QC/QA-HMA, 3, 70, SURFACE, 9.5 mm ON
2.5" – 275#/SYD. QC/QA-HMA, 3, 64, INTERMEDIATE, 19.0 mm ON
3.5" – 385#/SYD. QC/QA-HMA, 3, 64, BASE, 25.0 mm ON
2.5" – 250#/SYD. QC/QA-HMA, 3, 76, INTERMEDIATE, OG 19.0 mm ON
3" – 330#/SYD. QC/QA-HMA, 3, 64, BASE, 25.0 mm ON
INDOT, SUBGRADE TREATMENT, TYPE 1B OR 1C

(U) UNDERDRAIN – SEE STANDARD DRAWING 10-12

(17) CURB AND GUTTER, CONCRETE, TYPE II – SEE STANDARD DRAWING 10-14

(26) SODDING

(G) MULTI-USE PATH – SEE STANDARD DRAWING 10-20

NOTES:
* 6' MIN. TREE LAWN WHEN PRESENT

** CROSS SECTION DIMENSIONS ARE BASED ON CARMEL CLAY COMPREHENSIVE PLAN (C3PLAN)

*** FOR ALL LOCAL (NON-FEDERAL AID) PROJECTS ALL HMA ACCEPTANCE AND TESTING REQUIREMENTS PER SECTION 402 OF INDOT STANDARD SPECIFICATIONS.

REVISED 04-01-20

CITY OF CARMEL STANDARDS

TYPICAL SECTION – PRIMARY ARTERIAL

STANDARD DRAWING 10-1

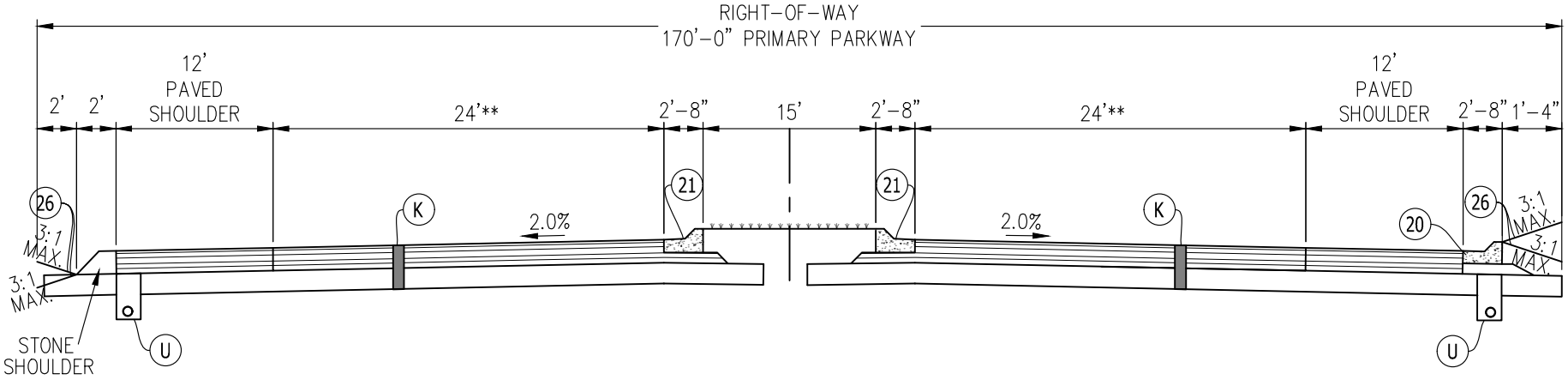

TYPICAL SECTION
PRIMARY PARKWAY

NO SCALE

LEGEND

(K) HMA PAVEMENT***
1.5" – 165#/SYD. QC/QA-HMA, 3, 70, SURFACE, 9.5 mm ON
2.5" – 275#/SYD. QC/QA-HMA, 3, 64, INTERMEDIATE, 19.0 mm ON
3.5" – 385#/SYD. QC/QA-HMA, 3, 64, BASE, 25.0 mm ON
2.5" – 250#/SYD. QC/QA-HMA, 3, 76, INTERMEDIATE, OG 19.0 mm ON
3" – 330#/SYD. QC/QA-HMA, 3, 64, BASE, 25.0 mm ON
INDOT SUBGRADE TREATMENT, TYPE 1B OR 1C

(U) UNDERDRAIN – SEE STANDARD DRAWING 10-12

(21) CURB & GUTTER, B, CONCRETE, MODIFIED – SEE STANDARD DRAWING 10-17.

(20) CURB & GUTTER, B, CONCRETE – SEE INDOT STANDARD DRAWING E605-CCCG-01

(26) SODDING

NOTES:

** CROSS SECTION DIMENSIONS ARE BASED ON CARMEL CLAY COMPREHENSIVE PLAN (C3PLAN)

*** FOR ALL LOCAL (NON-FEDERAL AID) PROJECTS ALL HMA ACCEPTANCE AND TESTING REQUIREMENTS PER SECTION 402 OF INDOT STANDARD SPECIFICATIONS.

REVISED 04-01-20

CITY OF CARMEL STANDARDS

TYPICAL SECTION – PRIMARY PARKWAY

STANDARD DRAWING 10-2

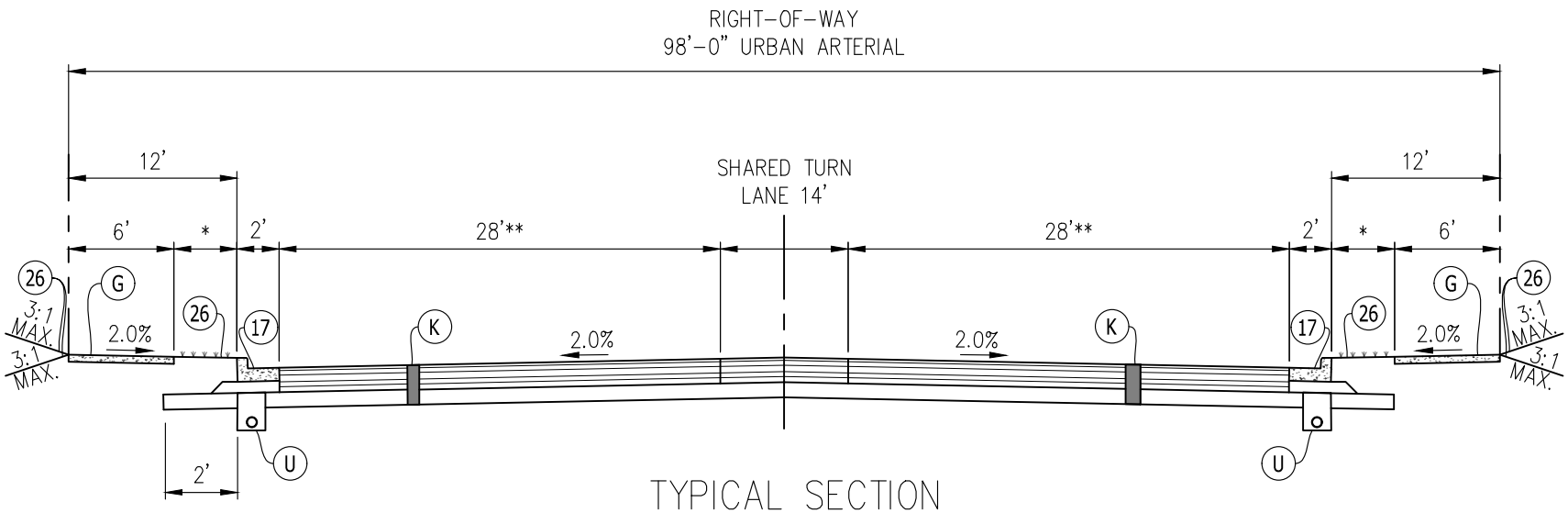

TYPICAL SECTION
URBAN ARTERIAL

NO SCALE

LEGEND

HMA PAVEMENT***

(K) 1.5" – 165#/SYD. QC/QA-HMA, 3, 70, SURFACE, 9.5 mm ON
2.5" – 275#/SYD. QC/QA-HMA, 3, 64, INTERMEDIATE, 19.0 mm ON
3.5" – 385#/SYD. QC/QA-HMA, 3, 64, BASE, 25.0 mm ON
2.5" – 250#/SYD. QC/QA-HMA, 3, 76, INTERMEDIATE, OG 19.0 mm ON
3" – 330#/SYD. QC/QA-HMA, 3, 64, BASE, 25.0 mm ON
INDOT SUBGRADE TREATMENT, TYPE 1B OR 1C

(G) SIDEWALK – SEE STANDARD DRAWING 10-18

(U) UNDERDRAIN – SEE STANDARD DRAWING 10-12

(17) CURB AND GUTTER, CONCRETE, TYPE II – SEE STANDARD DRAWING 10-14

(26) SODDING

NOTES:

* 6' MIN. TREE LAWN WHEN PRESENT

** CROSS SECTION DIMENSIONS ARE BASED ON CARMEL CLAY COMPREHENSIVE PLAN (C3PLAN)

*** FOR ALL LOCAL (NON-FEDERAL AID) PROJECTS ALL HMA ACCEPTANCE AND TESTING REQUIREMENTS PER SECTION 402 OF INDOT STANDARD SPECIFICATIONS.

REVISED 04-01-20

CITY OF CARMEL STANDARDS

TYPICAL SECTION – URBAN ARTERIAL

STANDARD DRAWING 10-3

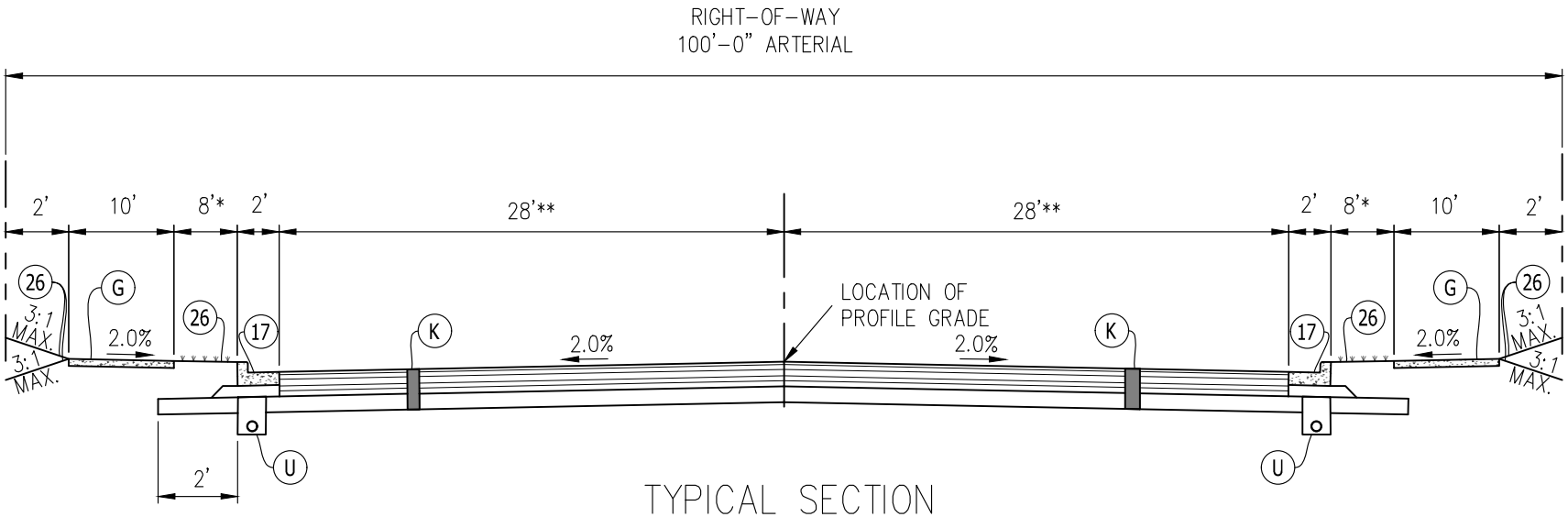

TYPICAL SECTION
ARTERIAL

NO SCALE

LEGEND

(K) HMA PAVEMENT***
1.5" – 165#/SYD. QC/QA-HMA, 3, 70, SURFACE, 9.5 mm ON
2.5" – 275#/SYD. QC/QA-HMA, 3, 64, INTERMEDIATE, 19.0 mm ON
3.5" – 385#/SYD. QC/QA-HMA, 3, 64, BASE, 25.0 mm ON
2.5" – 250#/SYD. QC/QA-HMA, 3, 76, INTERMEDIATE, OG 19.0 mm ON
3" – 330#/SYD. QC/QA-HMA, 3, 64, BASE, 25.0 mm ON
INDOT SUBGRADE TREATMENT, TYPE 1B OR 1C

(U) UNDERDRAIN – SEE STANDARD DRAWING 10-12

(17) CURB AND GUTTER, CONCRETE, TYPE II – SEE STANDARD DRAWING 10-14

(26) SODDING

(G) MULTI-USE PATH – SEE STANDARD DRAWING 10-20

NOTES:
* 6' MIN. TREE LAWN WHEN PRESENT

** CROSS SECTION DIMENSIONS ARE BASED ON CARMEL CLAY COMPREHENSIVE PLAN (C3PLAN)

*** FOR ALL LOCAL (NON-FEDERAL AID) PROJECTS ALL HMA ACCEPTANCE AND TESTING REQUIREMENTS PER SECTION 402 OF INDOT STANDARD SPECIFICATIONS.

REVISED 04-01-20

CITY OF CARMEL STANDARDS

TYPICAL SECTION – ARTERIAL

STANDARD DRAWING 10-4

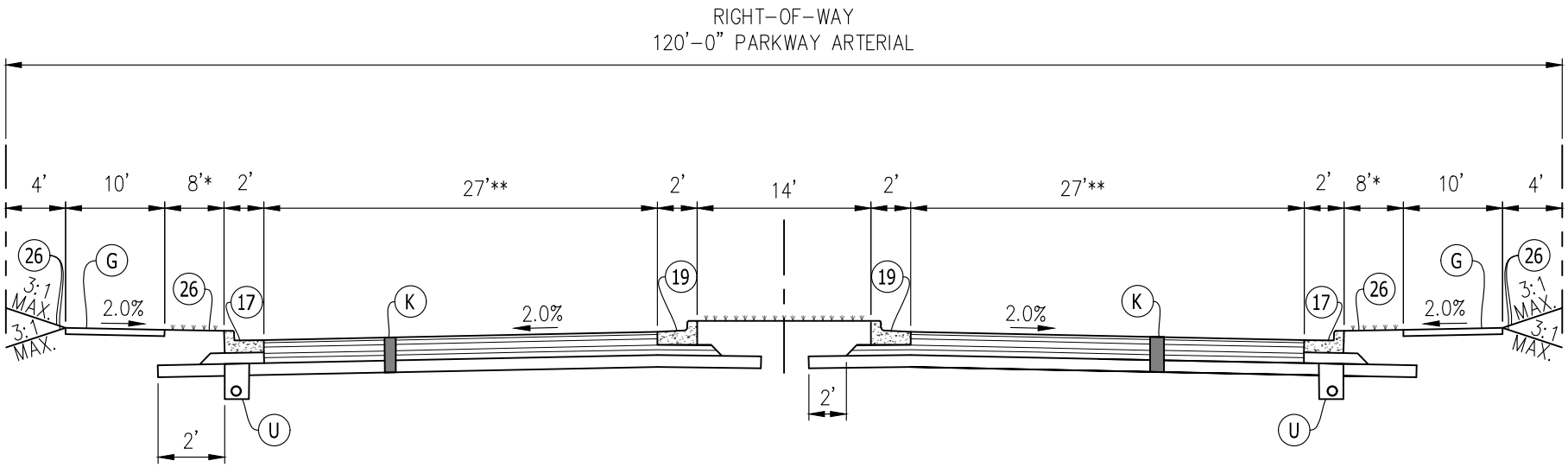

TYPICAL SECTION
PARKWAY ARTERIAL

NO SCALE

LEGEND

(K) HMA PAVEMENT***
1.5" – 165#/SYD. QC/QA-HMA, 3, 70, SURFACE, 9.5 mm ON
2.5" – 275#/SYD. QC/QA-HMA, 3, 64, INTERMEDIATE, 19.0 mm ON
3.5" – 385#/SYD. QC/QA-HMA, 3, 64, BASE, 25.0 mm ON
2.5" – 250#/SYD. QC/QA-HMA, 3, 76, INTERMEDIATE, OG 19.0 mm ON
3" – 330#/SYD. QC/QA-HMA, 3, 64, BASE, 25.0 mm ON
INDOT SUBGRADE TREATMENT, TYPE 1B OR 1C

(U) UNDERDRAIN – SEE STANDARD DRAWING 10-12

(17) CURB AND GUTTER, CONCRETE, TYPE II – SEE STANDARD DRAWING 10-14

(19) CURB AND GUTTER, CONCRETE, TYPE III – SEE STANDARD DRAWING 10-15

(26) SODDING

(G) MULTI-USE PATH – SEE STANDARD DRAWING 10-20

NOTES:

* 6' MIN. TREE LAWN WHEN PRESENT

** CROSS SECTION DIMENSIONS ARE BASED ON CARMEL CLAY COMPREHENSIVE PLAN (C3PLAN)

*** FOR ALL LOCAL (NON-FEDERAL AID) PROJECTS ALL HMA ACCEPTANCE AND TESTING REQUIREMENTS PER SECTION 402 OF INDOT STANDARD SPECIFICATIONS.

REVISED 04-01-20

CITY OF CARMEL STANDARDS

TYPICAL SECTION – PARKWAY ARTERIAL

STANDARD DRAWING 10-5

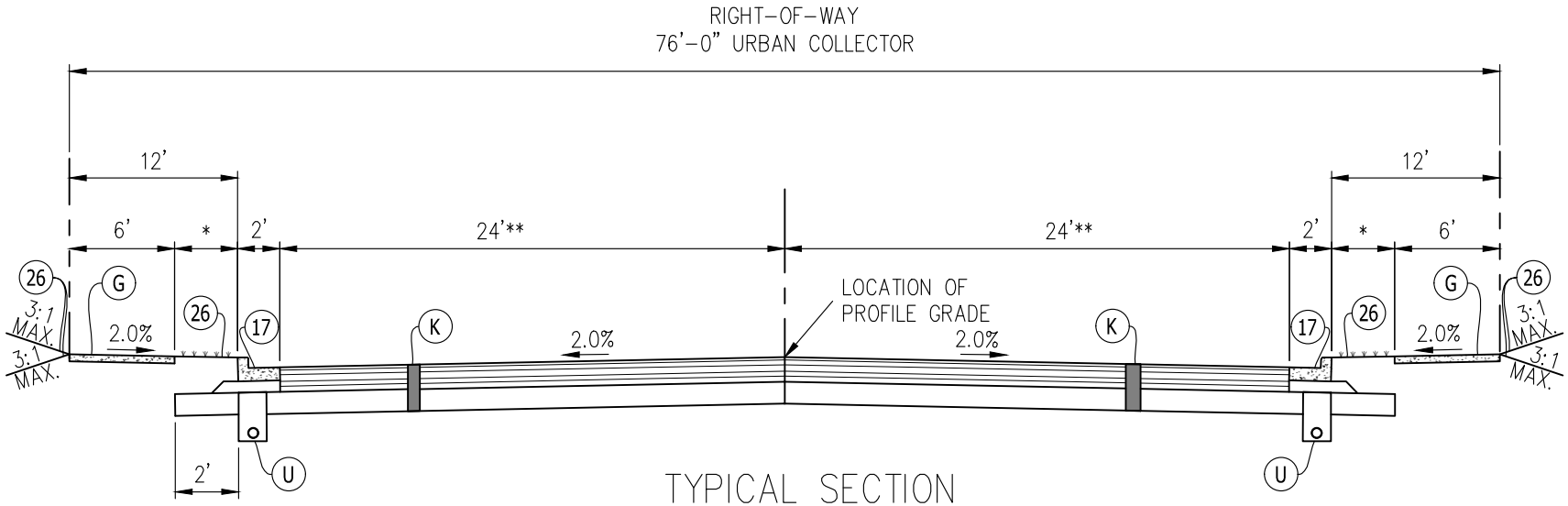

TYPICAL SECTION
URBAN COLLECTOR

NO SCALE

LEGEND

(K) HMA PAVEMENT***
1.5" – 165#/SYD. QC/QA-HMA, 3, 70, SURFACE, 9.5 mm ON
2.5" – 275#/SYD. QC/QA-HMA, 3, 64, INTERMEDIATE, 19.0 mm ON
3.5" – 385#/SYD. QC/QA-HMA, 3, 64, BASE, 25.0 mm ON
2.5" – 250#/SYD. QC/QA-HMA, 3, 76, INTERMEDIATE, OG 19.0 mm ON
3" – 330#/SYD. QC/QA-HMA, 3, 64, BASE, 25.0 mm ON
INDOT SUBGRADE TREATMENT, TYPE 1B OR 1C

(U) UNDERDRAIN – SEE STANDARD DRAWING 10-12

(17) CURB AND GUTTER, CONCRETE, TYPE II – SEE STANDARD DRAWING 10-14

(26) SODDING

(G) SIDEWALK – SEE STANDARD DRAWING 10-18

NOTES:
* 6' MIN. TREE LAWN WHEN PRESENT

** CROSS SECTION DIMENSIONS ARE BASED ON CARMEL CLAY COMPREHENSIVE PLAN (C3PLAN)

*** FOR ALL LOCAL (NON-FEDERAL AID) PROJECTS ALL HMA ACCEPTANCE AND TESTING REQUIREMENTS PER SECTION 402 OF INDOT STANDARD SPECIFICATIONS.

REVISED 04-01-20

CITY OF CARMEL STANDARDS

TYPICAL SECTION – URBAN COLLECTOR

STANDARD DRAWING 10-6

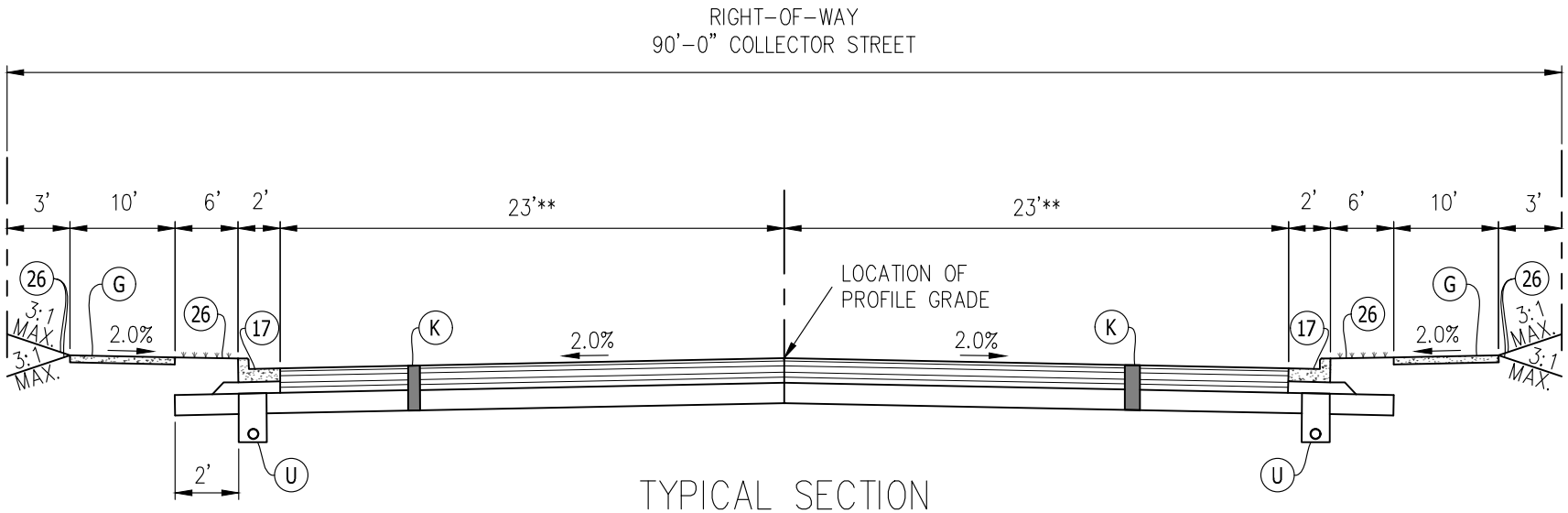

TYPICAL SECTION
COLLECTOR STREET

NO SCALE

LEGEND

(K) HMA PAVEMENT***
1.5" – 165#/SYD. QC/QA-HMA, 3, 70, SURFACE, 9.5 mm ON
2.5" – 275#/SYD. QC/QA-HMA, 3, 64, INTERMEDIATE, 19.0 mm ON
3.5" – 385#/SYD. QC/QA-HMA, 3, 64, BASE, 25.0 mm ON
2.5" – 250#/SYD. QC/QA-HMA, 3, 76, INTERMEDIATE, OG 19.0 mm ON
3" – 330#/SYD. QC/QA-HMA, 3, 64, BASE, 25.0 mm ON
INDOT SUBGRADE TREATMENT, TYPE 1B OR 1C

(U) UNDERDRAIN – SEE STANDARD DRAWING 10-12

(17) CURB AND GUTTER, CONCRETE, TYPE II – SEE STANDARD DRAWING 10-14 OR
CONCRETE ROLL CURB & GUTTER – SEE STANDARD DRAWING 10-13

(26) SODDING

(G) MULTI-USE PATH – SEE STANDARD DRAWING 10-20

NOTES:

** CROSS SECTION DIMENSIONS ARE BASED ON
CARMEL CLAY COMPREHENSIVE PLAN (C3PLAN)

*** FOR ALL LOCAL (NON-FEDERAL AID) PROJECTS
ALL HMA ACCEPTANCE AND TESTING REQUIREMENTS
PER SECTION 402 OF INDOT STANDARD SPECIFICATIONS.

REVISED 04-01-20

CITY OF CARMEL STANDARDS

TYPICAL SECTION – COLLECTOR STREET

STANDARD DRAWING 10-7

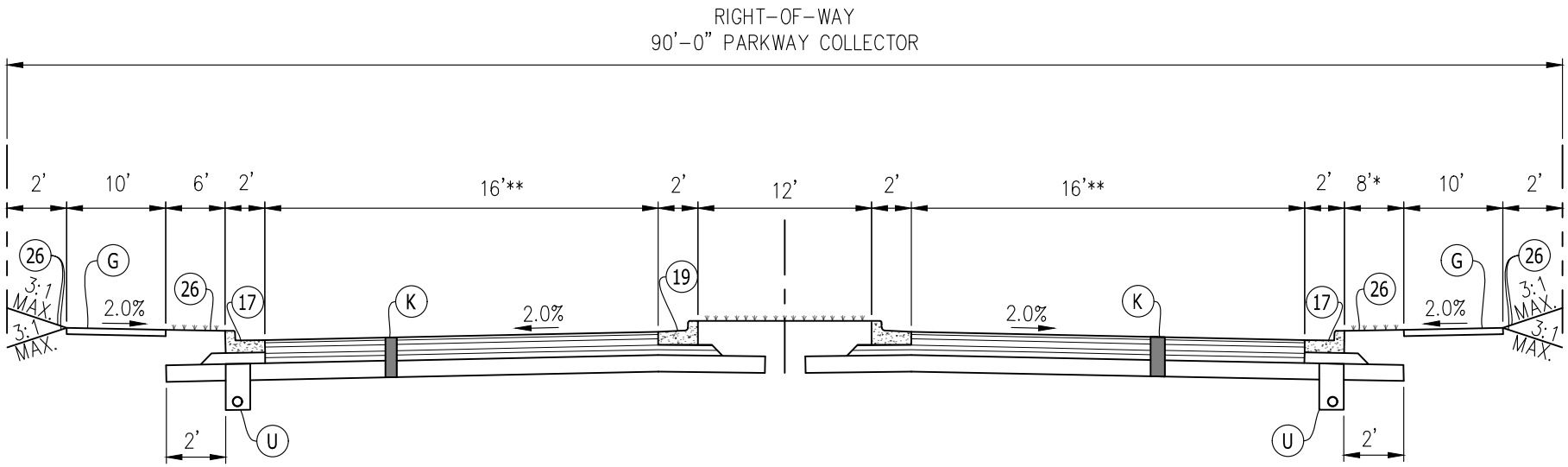

TYPICAL SECTION
PARKWAY COLLECTOR

NO SCALE

LEGEND

(K) HMA PAVEMENT***
1.5" – 165#/SYD. QC/QA-HMA, 3, 70, SURFACE, 9.5 mm ON
2.5" – 275#/SYD. QC/QA-HMA, 3, 64, INTERMEDIATE, 19.0 mm ON
3.5" – 385#/SYD. QC/QA-HMA, 3, 64, BASE, 25.0 mm ON
2.5" – 250#/SYD. QC/QA-HMA, 3, 76, INTERMEDIATE, OG 19.0 mm ON
3" – 330#/SYD. QC/QA-HMA, 3, 64, BASE, 25.0 mm ON
INDOT SUBGRADE TREATMENT, TYPE 1B OR 1C

(U) UNDERDRAIN – SEE STANDARD DRAWING 10-12

(17) CURB AND GUTTER, CONCRETE, TYPE II – SEE STANDARD DRAWING 10-14

(26) CURB AND GUTTER, CONCRETE, TYPE III – SEE STANDARD DRAWING 10-15

(26) SODDING

(G) MULTI-USE PATH – SEE STANDARD DRAWING 10-20

NOTES:
* 6' MIN. TREE LAWN WHEN PRESENT

** CROSS SECTION DIMENSIONS ARE BASED ON CARMEL CLAY COMPREHENSIVE PLAN (C3PLAN)

*** FOR ALL LOCAL (NON-FEDERAL AID) PROJECTS ALL HMA ACCEPTANCE AND TESTING REQUIREMENTS PER SECTION 402 OF INDOT STANDARD SPECIFICATIONS.

REVISED 04-01-20

CITY OF CARMEL STANDARDS

TYPICAL SECTION – PARKWAY COLLECTOR

STANDARD DRAWING 10-8

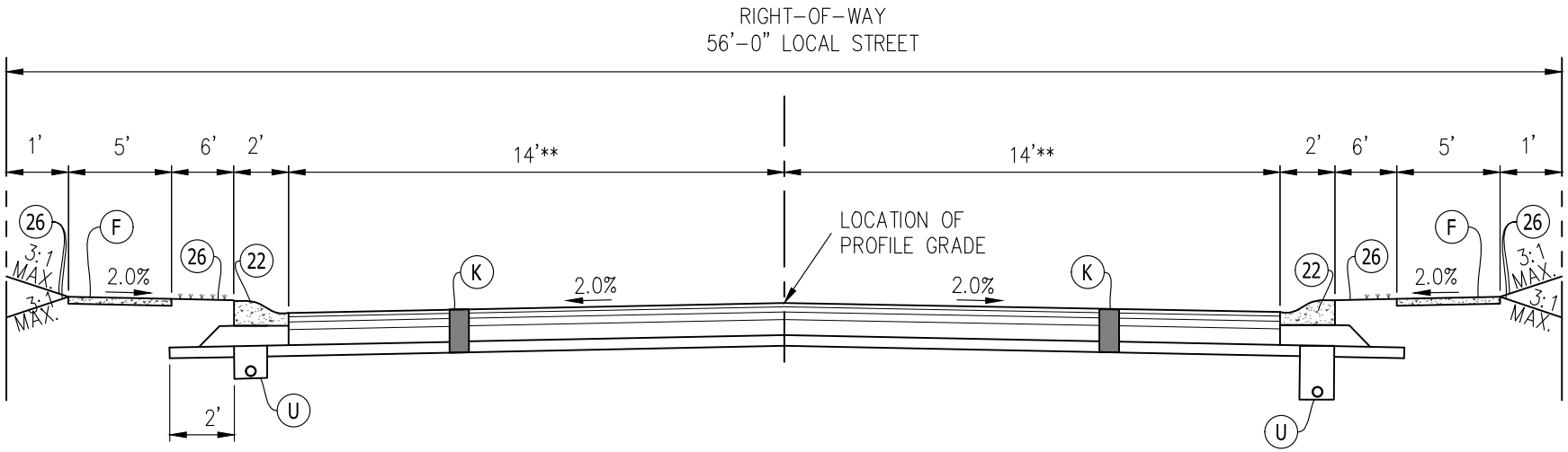

TYPICAL SECTION
LOCAL STREET

NO SCALE

LEGEND

(K) HMA PAVEMENT***
1.5" – 165#/SYD. QC/QA-HMA, 2, 64, SURFACE, 9.5 mm ON
2" – 220#/SYD. QC/QA-HMA, 2, 64, INTERMEDIATE, 19.0 mm ON
3" – 330#/SYD. QC/QA-HMA, 2, 64, BASE, 25.0 mm ON
6" COMPACTED AGGREGATE #53 ON
INDOT SUBGRADE TREATMENT, TYPE 1B OR 1C

(U) UNDERDRAIN – SEE STANDARD DRAWING 10-12

(F) SIDEWALK – SEE STANDARD DRAWING 10-18

(22) CONCRETE ROLL CURB AND GUTTER –
SEE STANDARD DRAWING 10-13

(26) SODDING

NOTES:

** CROSS SECTION DIMENSIONS ARE BASED ON
CARMEL CLAY COMPREHENSIVE PLAN (C3PLAN)

*** FOR ALL LOCAL (NON-FEDERAL AID) PROJECTS
ALL HMA ACCEPTANCE AND TESTING REQUIREMENTS
PER SECTION 402 OF INDOT STANDARD SPECIFICATIONS.

REVISED 04-01-20

CITY OF CARMEL STANDARDS

TYPICAL SECTION – LOCAL STREET

STANDARD DRAWING 10-9

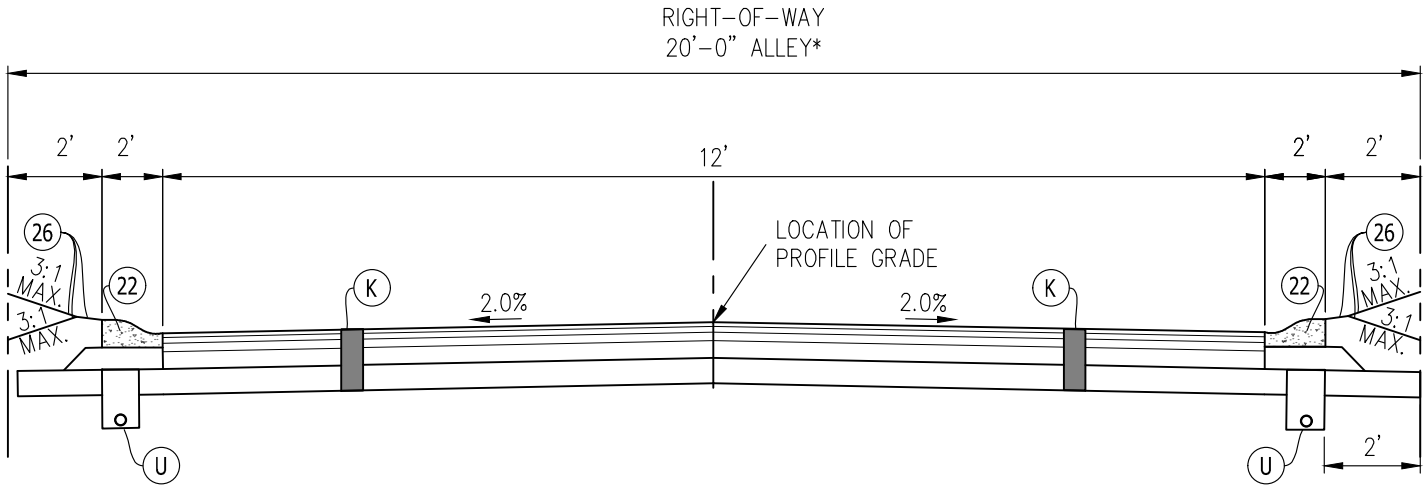

TYPICAL SECTION
ALLEY

NO SCALE

LEGEND

(K) HMA PAVEMENT**
1.5" – 165#/SYD. QC/QA-HMA, 2, 64, SURFACE, 9.5 mm ON
2" – 220#/SYD. QC/QA-HMA, 2, 64, INTERMEDIATE, 19.0 mm ON
3" – 330#/SYD. QC/QA-HMA, 2, 64, BASE, 25.0 mm ON
6" COMPACTED AGGREGATE #53 ON
INDOT SUBGRADE TREATMENT, TYPE 1B OR 1C

(U) UNDERDRAIN – SEE STANDARD DRAWING 10-12

(22) CONCRETE ROLL CURB AND GUTTER –
SEE STANDARD DRAWING 10-13

(26) SODDING

NOTES:

* CONFIRM ALLEY RIGHT-OF-WAY WIDTH WITH CITY OF CARMEL.

** FOR ALL LOCAL (NON-FEDERAL AID) PROJECTS
ALL HMA ACCEPTANCE AND TESTING REQUIREMENTS
PER SECTION 402 OF INDOT STANDARD SPECIFICATIONS.

REVISED 04-01-20

CITY OF CARMEL STANDARDS

TYPICAL SECTION – ALLEY

STANDARD DRAWING 10-10A

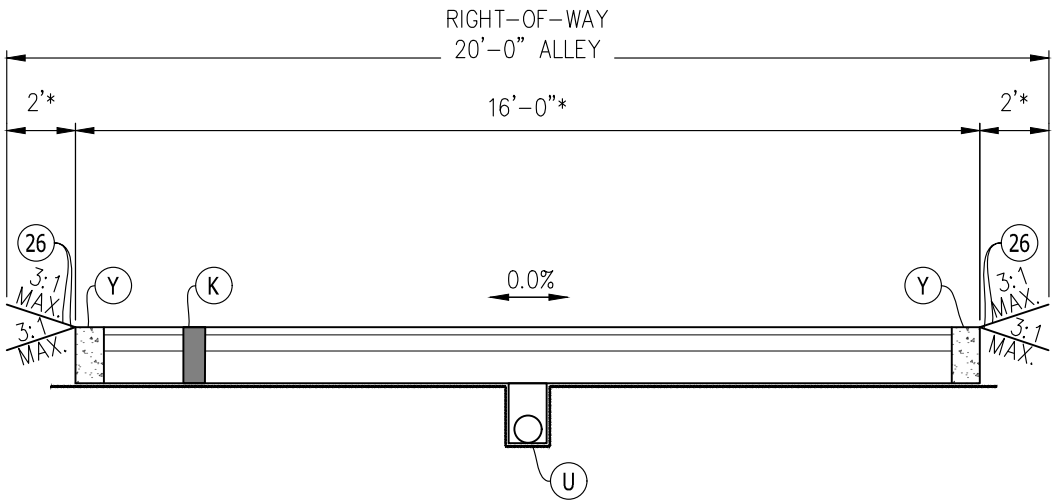

TYPICAL SECTION ALLEY (PERVIOUS PAVEMENT)

NO SCALE

LEGEND

(K) POROUS PAVEMENT
- 4" POROUS ASPHALT
- 6" WASHED AGGREGATE #8
- 12" WASHED AGGREGATE #4
- GEOGRID, IB
- NON-WOVEN GEOTEXTILE FABRIC
- INDOT SUBGRADE TREATMENT, TYPE III

OR

PERMEABLE PAVER
- 2 3/4" PERMEABLE PAVER (CLAY)
- 2" WASHED AGGREGATE #11 (BEDDING STONE)
- 5 1/4" WASHED AGGREGATE #8 (BASE STONE)
- 12" WASHED AGGREGATE #4
- GEOGRID, IB
- NON-WOVEN GEOTEXTILE FABRIC
- INDOT SUBGRADE TREATMENT, TYPE III

(U) UNDERDRAIN – SEE STANDARD DRAWING 10-12

(26) SODDING

—— NON-WOVEN GEOTEXTILE FABRIC

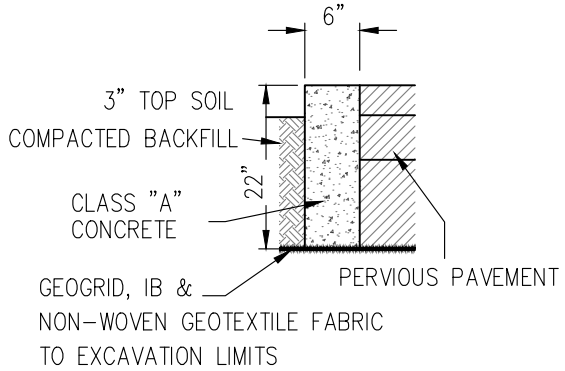

(Y) 6 IN. RIBBON CURB
NO SCALE

NOTES:

* WIDTH DEPENDS ON RIGHT-OF-WAY WIDTH. CONFIRM WITH CITY OF CARMEL.

TYPICAL PERMEABLE ALLEY SECTIONS ABOVE ARE THE MINIMUM SECTIONS FOR ANY PERMEABLE ALLEY. EACH SECTION SHALL BE DESIGNED TO MEET ANY NECESSARY DETENTION AND WATER QUALITY REQUIREMENTS PER CITY OF CARMEL ENGINEERING DEPARTMENT.

REVISED 04-01-20

CITY OF CARMEL STANDARDS

TYPICAL SECTION – POROUS/PERMEABLE ALLEY

STANDARD DRAWING 10-10B

NOT TO SCALE

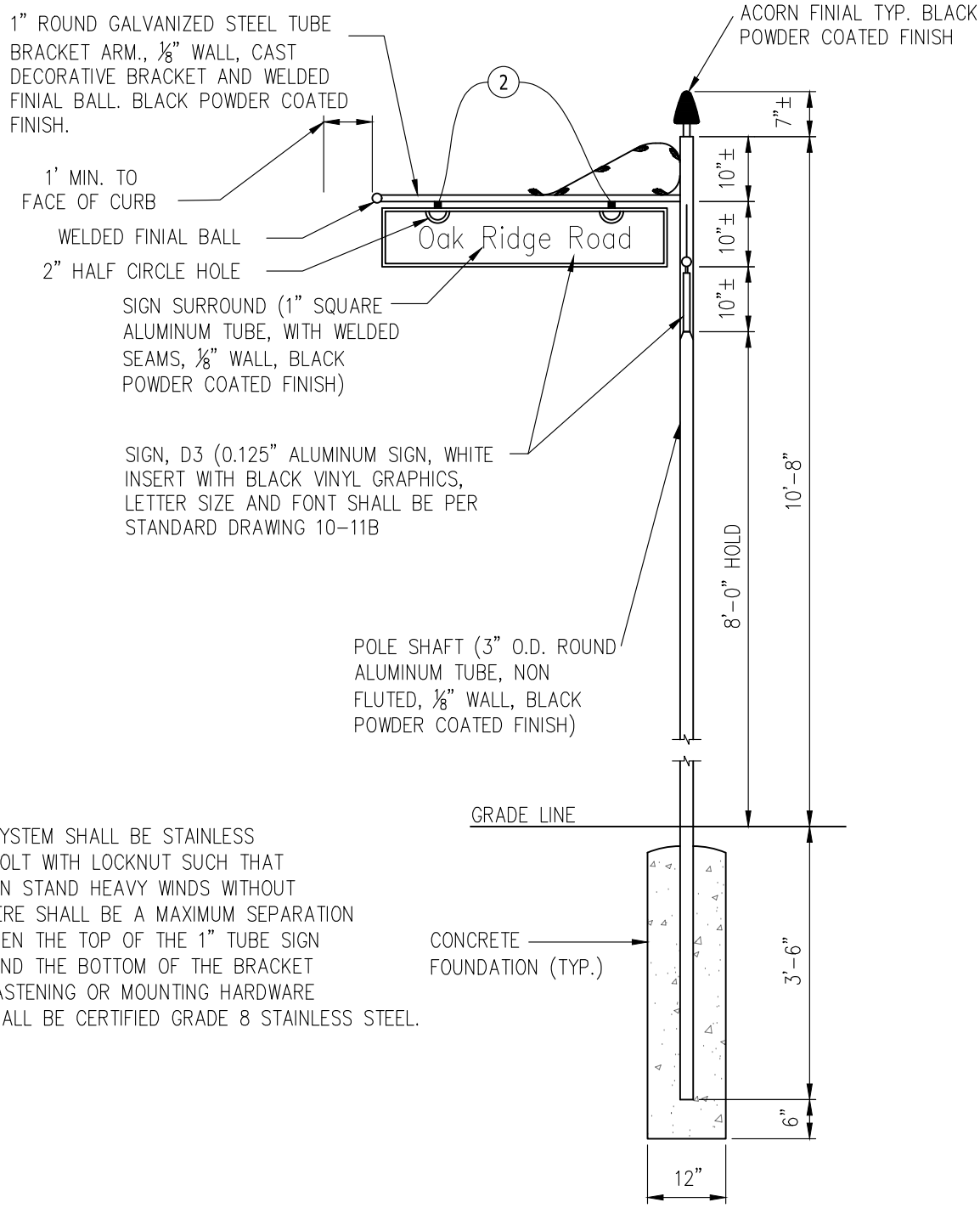

(2) FASTENING SYSTEM SHALL BE STAINLESS STEEL EYE BOLT WITH LOCKNUT SUCH THAT THE SIGN CAN STAND HEAVY WINDS WITHOUT DAMAGE. THERE SHALL BE A MAXIMUM SEPARATION OF 2" BETWEEN THE TOP OF THE 1" TUBE SIGN SURROUND AND THE BOTTOM OF THE BRACKET ARM. ANY FASTENING OR MOUNTING HARDWARE PROVIDED SHALL BE CERTIFIED GRADE 8 STAINLESS STEEL.

NOTES:

- FINISH TO BE BLACK POWDER COATED. ALL STREET NAME SIGNS TO BE PER GENERAL NOTES 1, 2, & 3 ON STANDARD DRAWING 10-11B.

REVISED 04-01-20

STANDARD DRAWING 10-11A	CITY OF CARMEL STANDARDS
	DECORATIVE STREET SIGNAGE DETAIL

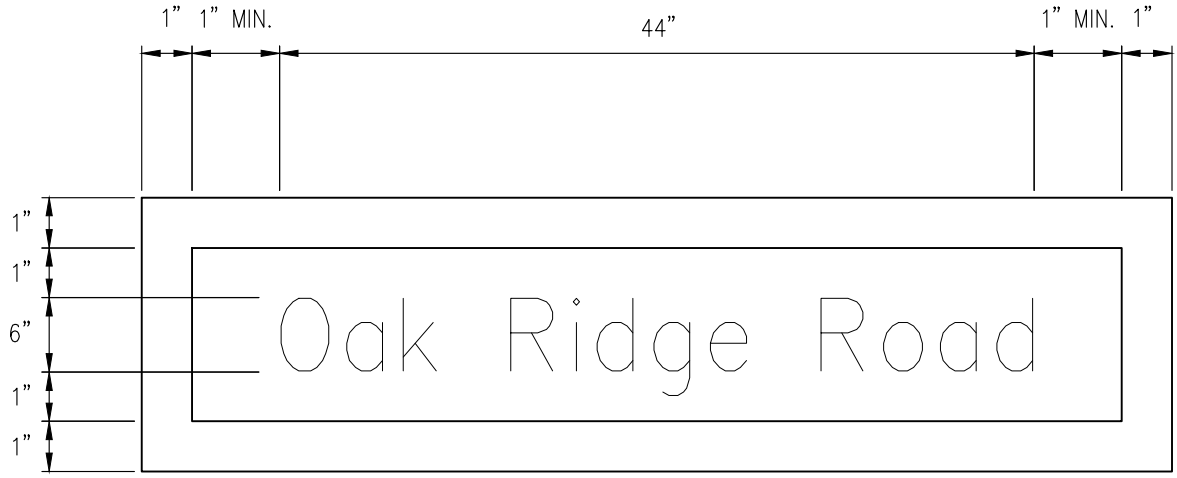

STANDARD DECORATIVE BLADE DETAIL

NO SCALE

ALL DECORATIVE BLADES HAVE A SPACE OF 44" FOR STREET NAMES. THEREFORE, LETTERING WIDTH SHALL BE ADJUSTED SO THAT STREET NAME FILLS THIS 44" SPACE AND SHOP DRAWINGS SHALL BE APPROVED BY THE CITY OF CARMEL. ALL LETTER FONT SHALL BE HIGHWAY GOTHIC AND SIZE SHALL BE AS SHOWN ON DETAIL ABOVE. THE WORD INDICATING STREET, ROAD, PARKWAY, ETC. MAY BE ABBREVIATED OR SPELLED OUT DEPENDING ON THE STREET NAME, FOR EXAMPLE:

96TH Street

W Main Street

FOR LESS LENGTHY STREET NAMES OR

Westfield Blvd

Pennsylvania St

FOR LENGTHY STREET NAMES

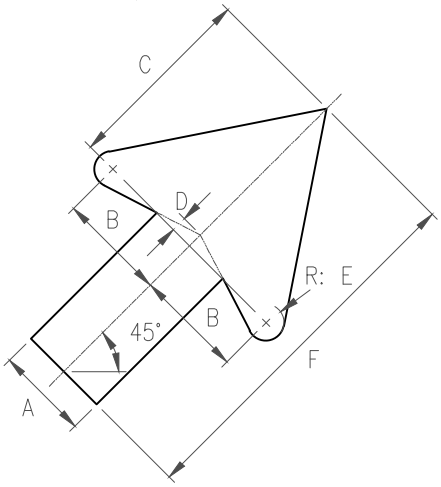

A	B	C	D	E	F
2.25	2.625	4.5	0.375	0.438	9

GENERAL NOTES:

1. IF CUSTOM SIGNAGE IS NECESSARY AND THE STANDARD DECORATIVE BLADES CANNOT ACCOMMODATE THE INFORMATION, LARGER BLADES CAN BE SUBMITTED FOR APPROVAL. ANY CUSTOM BLADES OVER 48" IN LENGTH SHALL BE PLACED ON TWO CUSTOM POSTS.
2. ALL STREET NAME SIGNS AT ROUNDABOUT INTERSECTIONS OR THAT ARE FOR ONE DIRECTION OF TRAVEL SHALL BE ONE SIDED UNLESS DIRECTED OTHERWISE. THERE SHALL ALSO BE A DIRECTIONAL ARROW PLACED AT THE END OF THE STREET NAME INDICATING THE DIRECTION OF TRAVEL FOR WHICH THE STREET SIGN DESIGNATES AS PER SIGN DESIGNATION D1-1d OF THE STANDARD HIGHWAY SIGNS MANUAL AND DIMENSION DETAIL ABOVE. PLEASE REFER TO STANDARD DRAWING 10-51 AND 10-52 FOR TYP. ROUNDABOUT SIGN PLACEMENT: NOTE 5.
3. ALL OTHER STREET NAME SIGNS SHALL BE TWO-SIDED UNLESS DIRECTED OTHERWISE.
4. WHERE NECESSARY, AND AS APPROVED BY THE CITY OF CARMEL, ORIGINAL DIRECTIONS PLACED AT FRONT OF SIGN TEXT. (EXAMPLE ABOVE: W MAIN STREET)
5. GREEN REFLECTIVE BACKGROUND SIGNS ARE TO BE USED ONLY FOR INTERIOR NEIGHBORHOOD STREETS. COORDINATE WITH CITY OF CARMEL FOR APPROVAL.

REVISED 04-01-20

STANDARD DRAWING 10-11B	CITY OF CARMEL STANDARDS
	DECORATIVE BLADE DETAIL

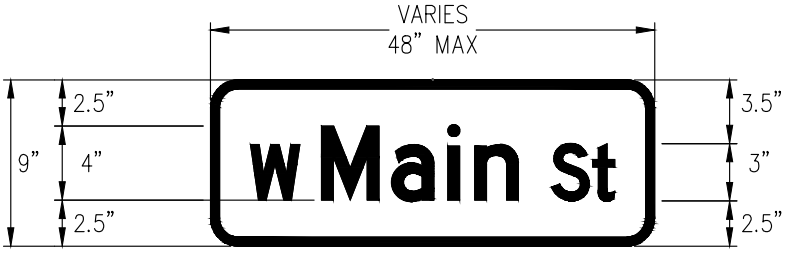

BORDER WIDTH = 0.5"
CORNER RADIUS = 1.5"

STANDARD NON-DECORATIVE BLADE DETAIL

NO SCALE

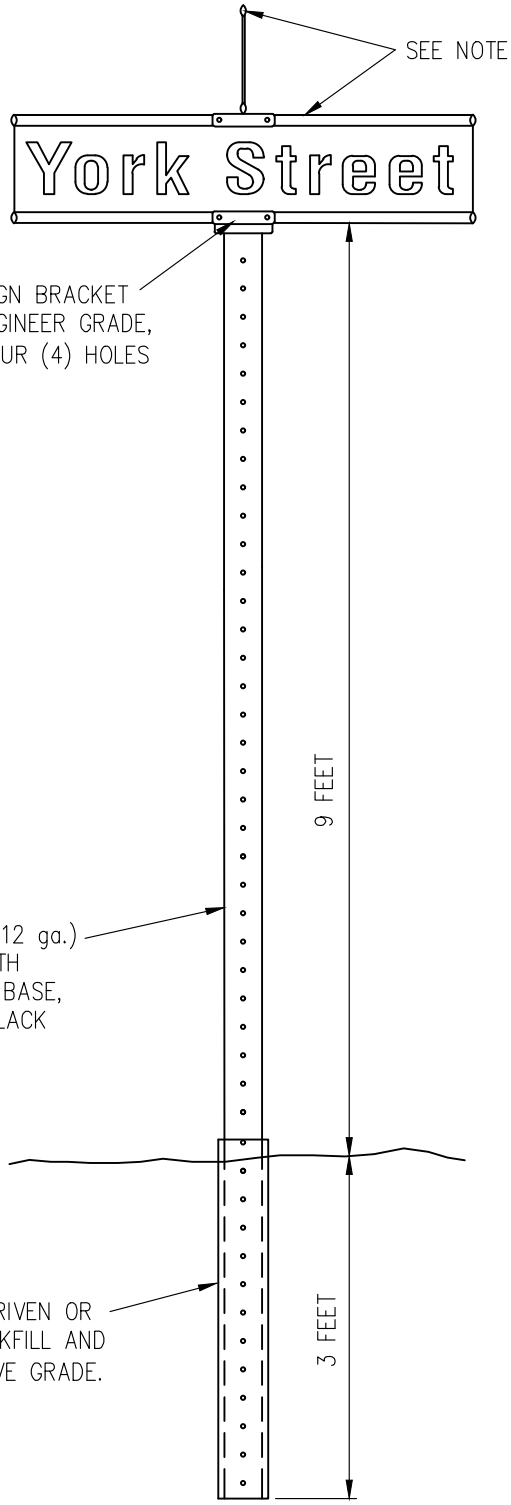

NOTE:

1. BLADES SHALL BE 9 INCH WIDE EXTRUDED ALUMINUM WITH DOUBLE FACED GREEN REFLECTIVE BACKGROUND WITH 1-1/2" CORNER RADIUS AND A WHITE 1/2 INCH REFLECTIVE BORDER. LETTER FONT SHALL BE HIGHWAY GOTHIC AND SIZE SHALL BE AS SHOWN ON DETAIL ABOVE. REFLECTIVITY PROPERTIES SHALL BE PER MUTCD REQUIREMENTS.
2. WORDS INDICATING STREET, ROAD, BOULEVARD, ETC. SHALL BE ABBREVIATED FOR NON-DECORATIVE SIGNS, UNLESS OTHERWISE DIRECTED BY CITY OF CARMEL.
3. SIGN BLADE WIDTH IS 48" MAXIMUM. ADJUST TEXT WIDTH IF NECESSARY.
4. GREEN REFLECTIVE BACKGROUND SIGNS ARE TO BE USED FOR INTERIOR NEIGHBORHOOD STREETS. COORDINATE WITH CITY OF CARMEL FOR APPROVAL. SHOP DRAWINGS TO BE APPROVED BY CITY OF CARMEL.

REVISED 04-01-20

STANDARD DRAWING 10-11C	CITY OF CARMEL STANDARDS
	NON-DECORATIVE STREET SIGNAGE DETAIL

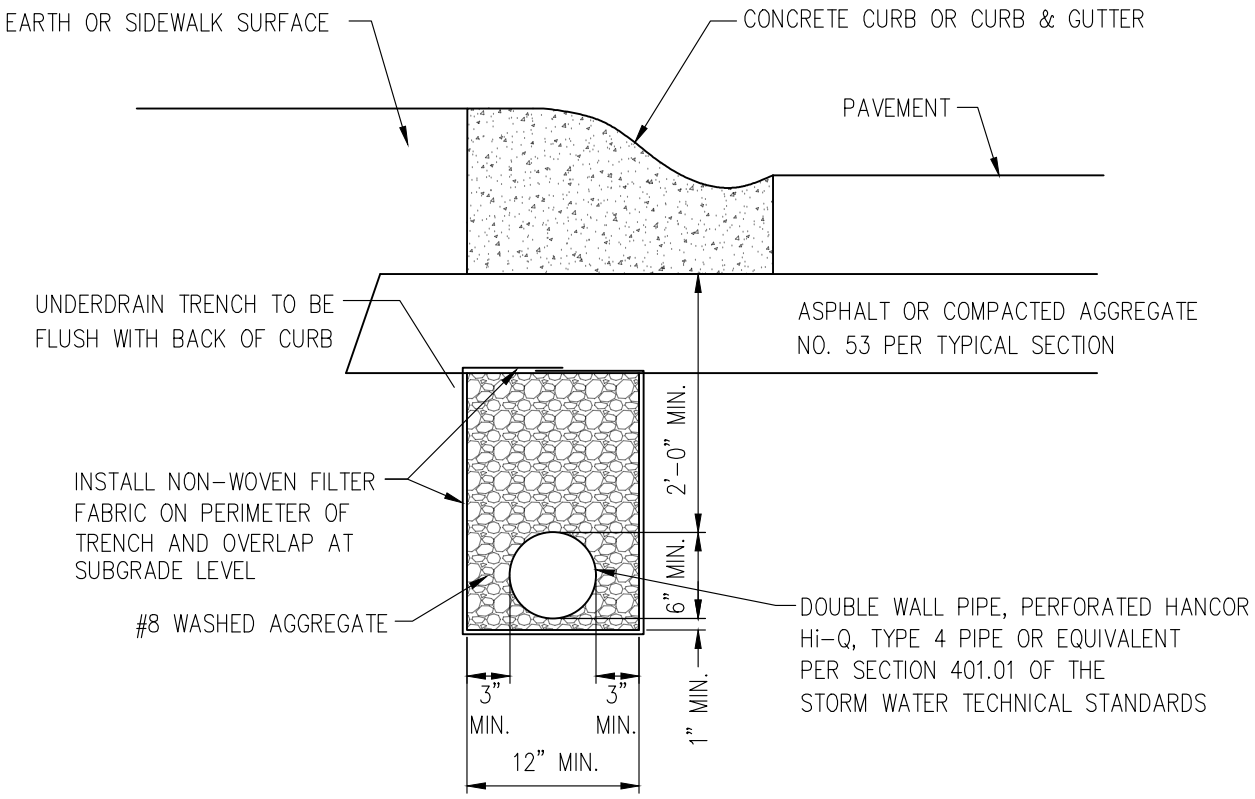

UNDERDRAIN

NO SCALE

NOTES:

PIPE SHALL CONFORM TO SPEC REQUIREMENTS OF SECTION 718 OF STANDARD SPECIFICATION

INSTALLATION REQUIRED: BOTH SIDES OF PAVEMENT AND WHERE REQUESTED BY THE CITY ENGINEER

STANDARD DRAWING 10-12	CITY OF CARMEL STANDARDS
	UNDERDRAIN

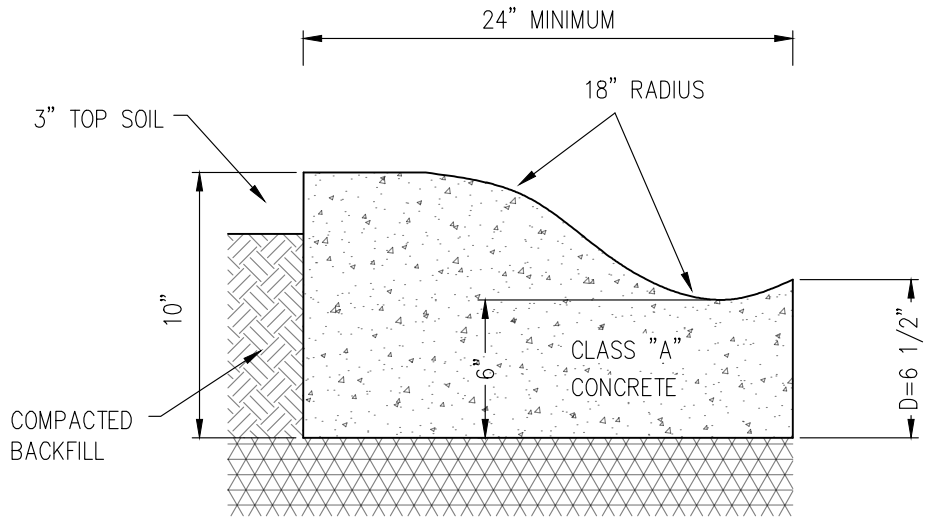

CONCRETE ROLL CURB & GUTTER

NO SCALE

NOTES: INTEGRAL CURB WITH CONCRETE PAVEMENT SHALL BE SIMILAR SHAPE

CURE ALL EXPOSED SURFACES

CONTRACTION JOINTS SHALL BE SAWED IN CONTINUOUSLY POURED CURBS TO A MINIMUM DEPTH OF 1/3" D

DAMPEN SUBGRADE BEFORE PLACING CONCRETE

CONTROL JOINTS EVERY 5' MAXIMUM ON RADII OTHERWISE EVERY 10' MAXIMUM. PREFORMED EXPANSION JOINT EVERY 50' MAXIMUM.

NO BACKFILLING OR COMPACTION MAY OCCUR 12' FROM CURB UNTIL 5 FULL DAYS HAVE PASSED AFTER PLACING CONCRETE

SHALL BE INSTALLED IN ACCORDANCE WITH INDOT STANDARD SPECIFICATIONS.

CITY OF CARMEL STANDARDS

CONCRETE ROLL CURB & GUTTER

STANDARD DRAWING 10-13

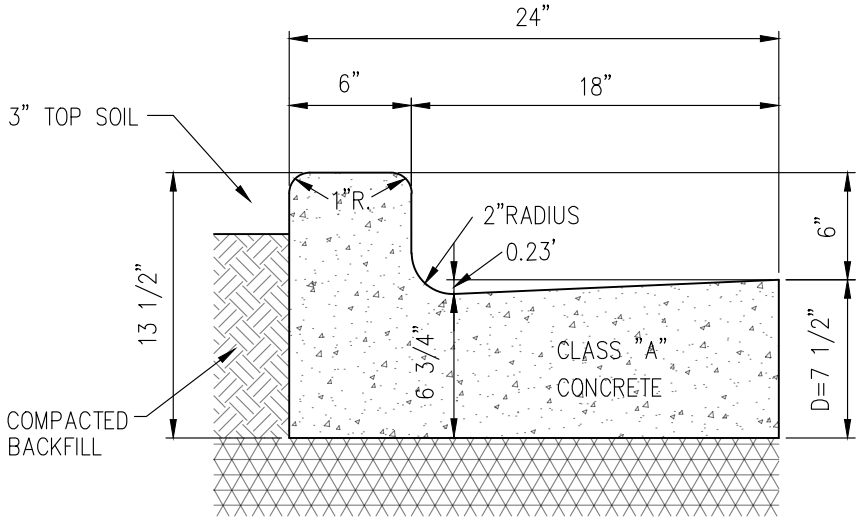

CURB AND GUTTER, CONCRETE, TYPE II

NO SCALE

NOTES: INTEGRAL CURB WITH CONCRETE PAVEMENT SHALL BE SIMILAR SHAPE

CURE ALL EXPOSED SURFACES

CONTRACTION JOINTS SHALL BE SAWED IN CONTINUOUSLY POURED CURBS TO A MINIMUM DEPTH OF 1/3" D

DAMPEN SUBGRADE BEFORE PLACING CONCRETE

CONTROL JOINTS EVERY 5' MAXIMUM ON RADII OTHERWISE EVERY 10' MAXIMUM. PREFORMED EXPANSION JOINT EVERY 50' MAXIMUM.

NO BACKFILLING OR COMPACTION MAY OCCUR 12' FROM CURB UNTIL 5 FULL DAYS HAVE PASSED AFTER PLACING CONCRETE

SHALL BE INSTALLED IN ACCORDANCE WITH INDOT STANDARD SPECIFICATIONS.

CITY OF CARMEL STANDARDS

CURB AND GUTTER, CONCRETE, TYPE II

STANDARD DRAWING 10-14

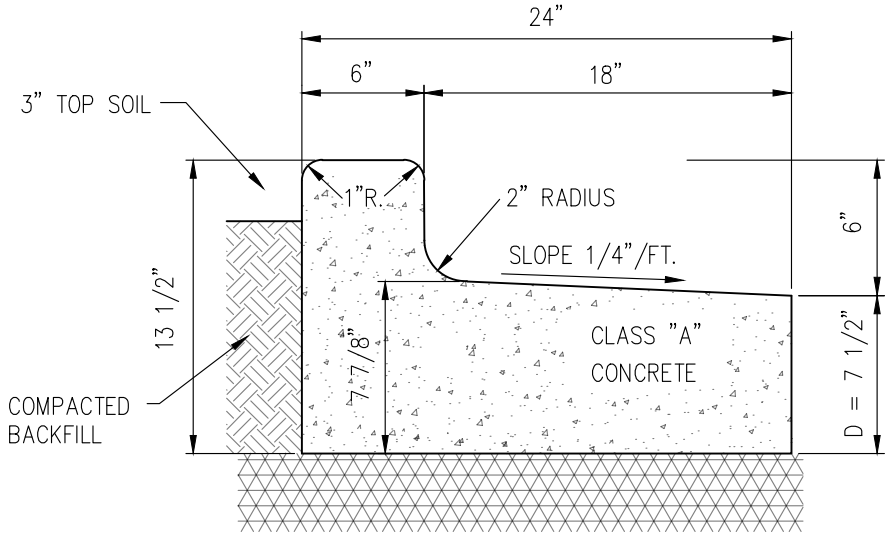

CURB AND GUTTER, CONCRETE, TYPE III

NO SCALE

NOTES: INTEGRAL CURB WITH CONCRETE PAVEMENT SHALL BE SIMILAR SHAPE

CURE ALL EXPOSED SURFACES

CONTRACTION JOINTS SHALL BE SAWED IN CONTINUOUSLY POURED CURBS TO A MINIMUM DEPTH OF 1/3" D

DAMPEN SUBGRADE BEFORE PLACING CONCRETE

CONTROL JOINTS EVERY 5' MAXIMUM ON RADII OTHERWISE EVERY 10' MAXIMUM. PREFORMED EXPANSION JOINT EVERY 50' MAXIMUM.

NO BACKFILLING OR COMPACTION MAY OCCUR 12' FROM CURB UNTIL 5 FULL DAYS HAVE PASSED AFTER PLACING CONCRETE

SHALL BE INSTALLED IN ACCORDANCE WITH INDOT STANDARD SPECIFICATIONS.

CITY OF CARMEL STANDARDS

CURB AND GUTTER, CONCRETE, TYPE III

STANDARD DRAWING 10-15

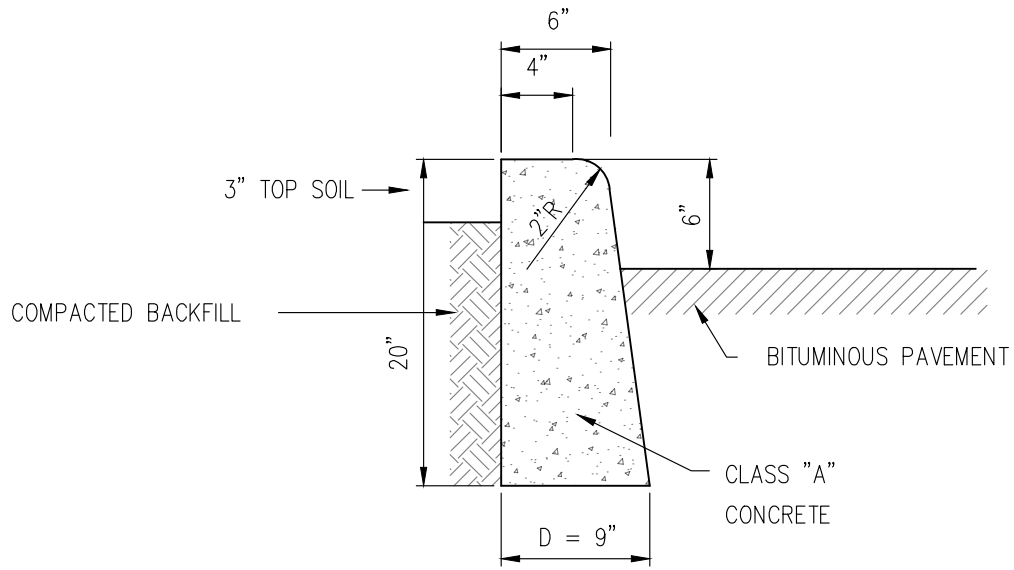

STRAIGHT CONCRETE CURB

NO SCALE

NOTES: INTEGRAL CURB WITH CONCRETE PAVEMENT SHALL BE SIMILAR SHAPE

CURE ALL EXPOSED SURFACES

CONTRACTION JOINTS SHALL BE SAWED IN CONTINUOUSLY POURED CURBS TO A MINIMUM DEPTH OF 1/3" D

DAMPEN SUBGRADE BEFORE PLACING CONCRETE

CONTROL JOINTS EVERY 5' MINIMUM ON RADII OTHERWISE EVERY 10' MINIMUM

NO BACKFILLING OR COMPACTION MAY OCCUR 12' FROM CURB UNTIL 5 FULL DAYS HAVE PASSED AFTER PLACING CONCRETE

SHALL BE IN ACCORDANCE WITH INDOT STANDARD SPECIFICATIONS.

CITY OF CARMEL STANDARDS

STRAIGHT CONCRETE CURB

STANDARD DRAWING 10-16

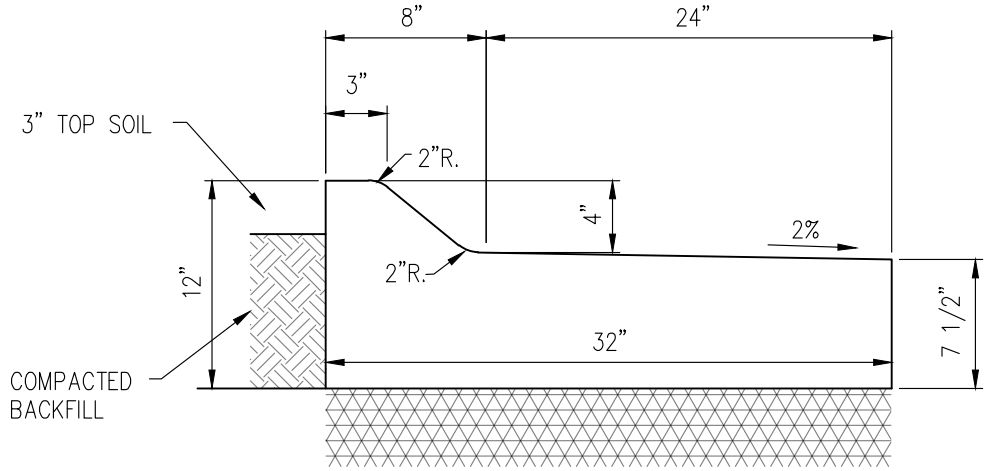

CURB AND GUTTER, B, CONCRETE, MODIFIED

NO SCALE

NOTES: INTEGRAL CURB WITH CONCRETE PAVEMENT SHALL BE SIMILAR SHAPE

CURE ALL EXPOSED SURFACES

CONTRACTION JOINTS SHALL BE SAWED IN CONTINUOUSLY POURED CURBS TO A MINIMUM DEPTH OF 1/3" D

DAMPEN SUBGRADE BEFORE PLACING CONCRETE

CONTROL JOINTS EVERY 5' MINIMUM ON RADII OTHERWISE EVERY 10' MINIMUM

NO BACKFILLING OR COMPACTION MAY OCCUR 12' FROM CURB UNTIL 5 FULL DAYS HAVE PASSED AFTER PLACING CONCRETE

SHALL BE IN ACCORDANCE WITH INDOT STANDARD SPECIFICATIONS.

CITY OF CARMEL STANDARDS

CURB AND GUTTER, B, CONCRETE, MODIFIED

STANDARD DRAWING 10-17

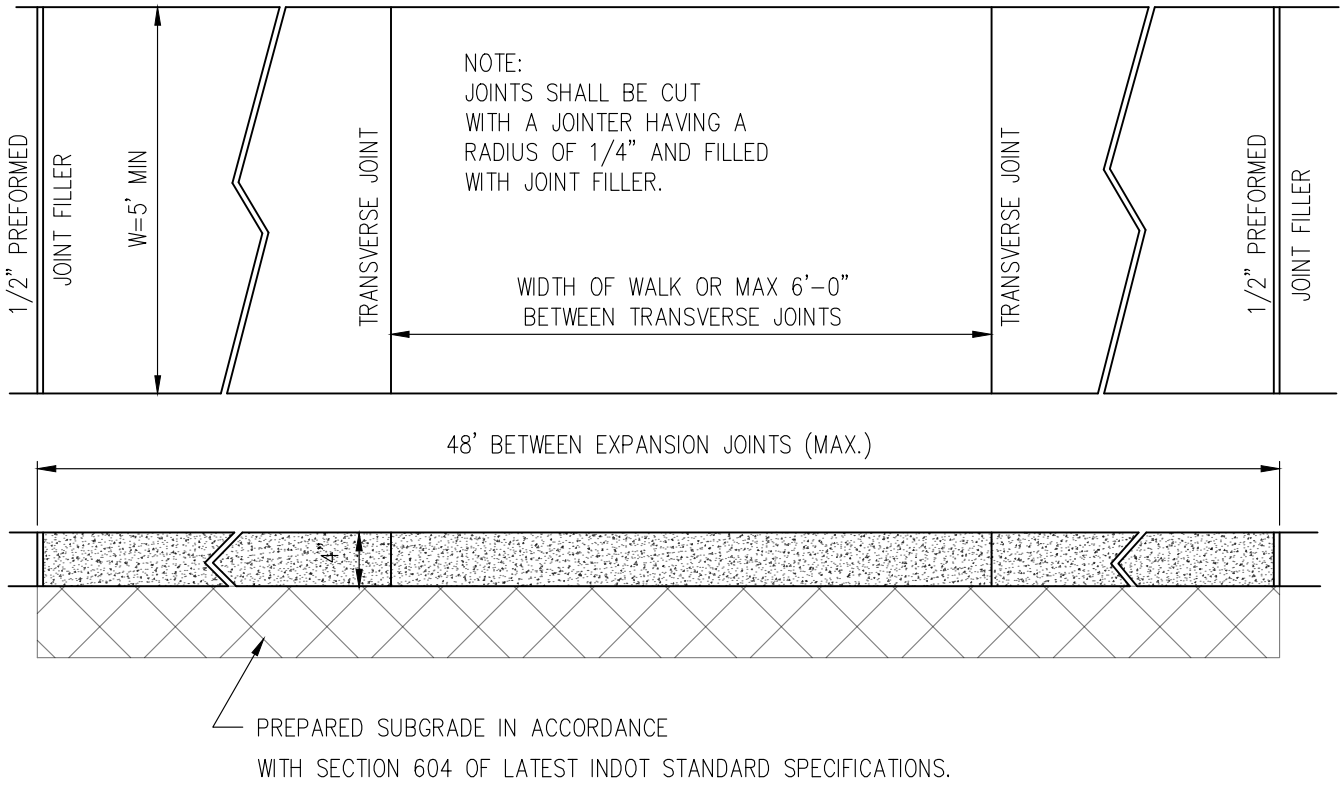

CONCRETE SIDEWALK

NO SCALE

NOTES:

EDGED AND BROOM FINISHED . NO "PICTURE FRAME" FINISHES WILL BE PERMITTED

CLASS 'A' CONCRETE

6" DEPTH OF CONCRETE AND 6" COMPACTED AGGREGATE NO. 53 TO BE USED ACROSS DRIVES

IF AGGREGATE IS REQUIRED #53 STONE WILL BE USED AT A MINIMUM OF 4", WITH EXCEPTION OF ACROSS DRIVES

REVISED 04-01-20

CITY OF CARMEL STANDARDS

TYPICAL - SIDEWALK DETAIL

STANDARD DRAWING 10-18

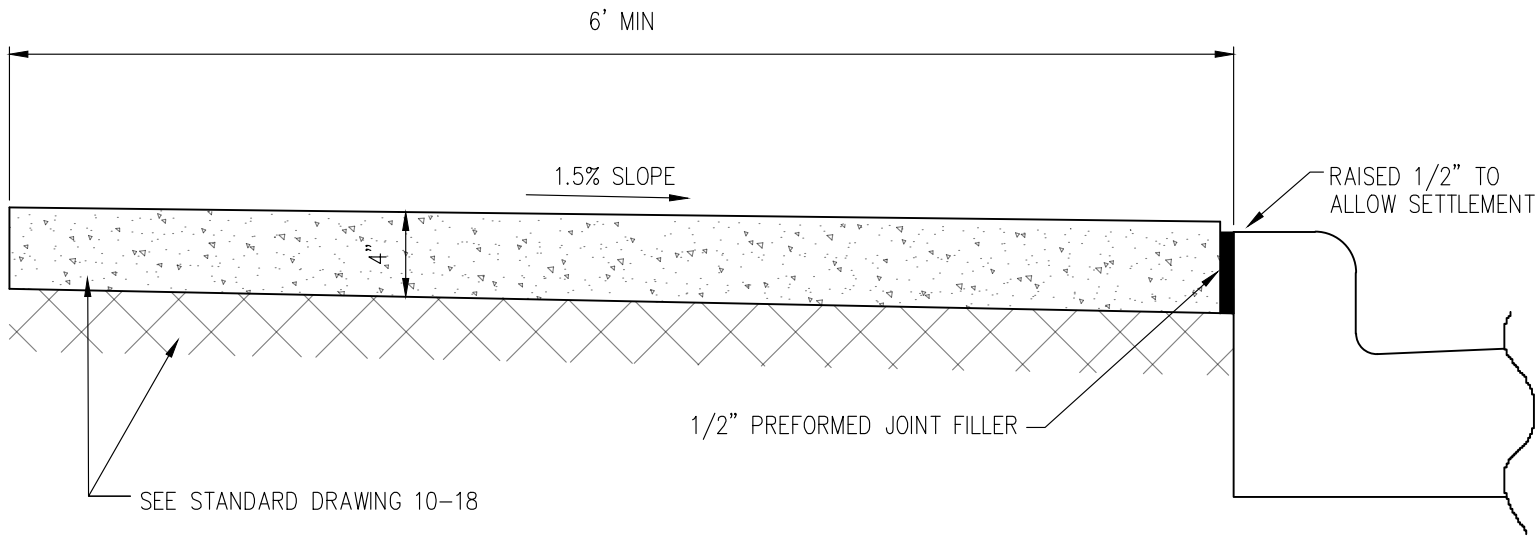

SIDEWALK ADJACENT TO CURB

NO SCALE

REVISED 04-01-20

CITY OF CARMEL STANDARDS

SIDEWALK ADJACENT TO CURB

STANDARD DRAWING 10-19

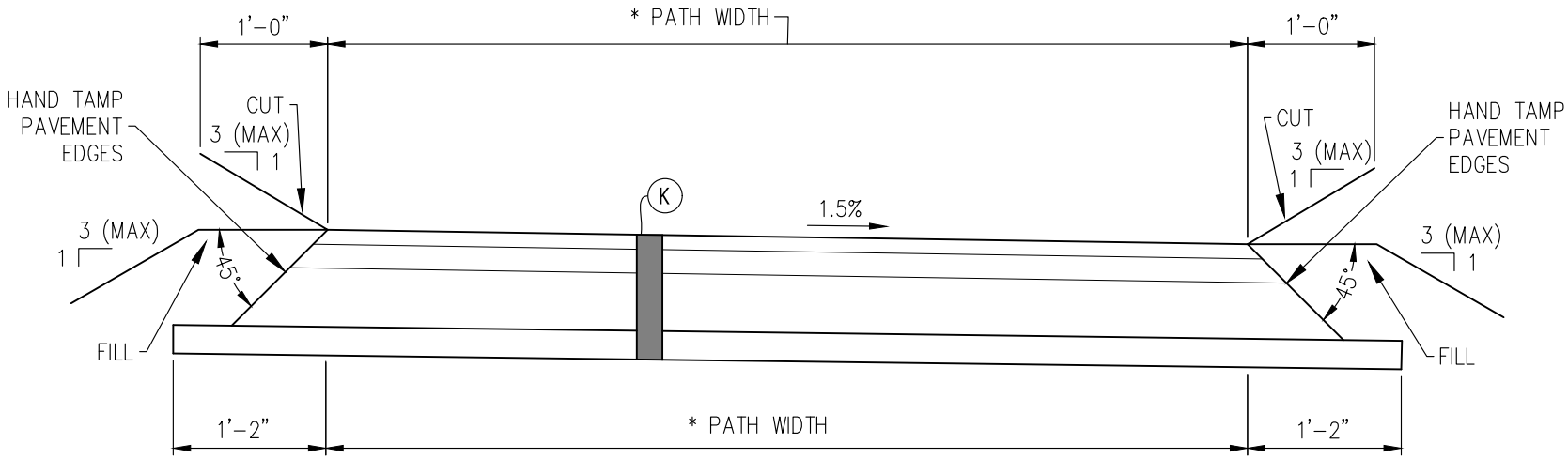

MULTI-USE PATH

NO SCALE

(K) HMA FOR SIDEWALK
1.5" – 165#/SYD. HMA SURFACE, TYPE 'B', 9.5 mm ON
2.5" – 275#/SYD. HMA INTERMEDIATE, TYPE 'B', 19.0 mm ON
6" COMPACTED AGGREGATE #53 ON
GEOGRID, IB (AS DIRECTED BY THE ENGINEER)
INDOT SUBGRADE TREATMENT, TYPE III

* WIDTH OF RECREATIONAL ASPHALT PATH AS DESIGNATED BY CARMEL CLAY COMPREHENSIVE PLAN (C3 PLAN)

REVISED 04-01-20

CITY OF CARMEL STANDARDS

MULTI-USE PATH

STANDARD DRAWING 10-20

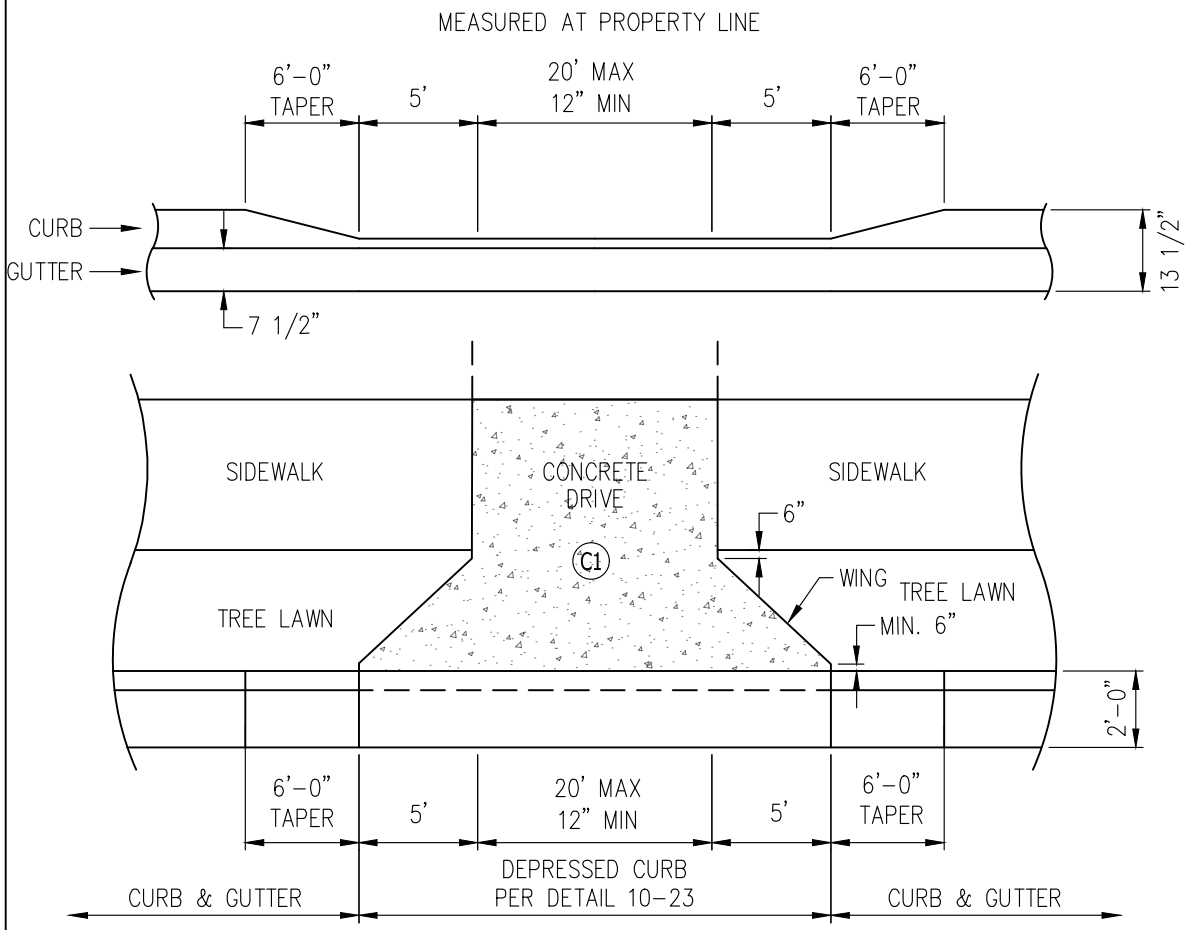

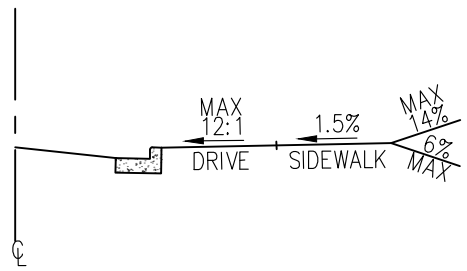

CROSS-SECTION VIEW

LEGEND

(C1) PCCP FOR APPROACH, 6" ON INDOT SUBGRADE TREATMENT, TYPE II

RESIDENTIAL DRIVEWAYS

NO SCALE

NOTES:

DEPRESSED CURB USED FOR ALL APLICATIONS EXCEPT ROLL CURB.

ANY EXISTING CURB, SHALL BE SAWCUT AT THE NEAREST JOINT TO THE REMOVAL LIMITS AND THE EXISTING CURB REMOVED.

WINGS SHALL BE SIZED AS NOTED REGARDLESS OF EXISTENCE OR LOCATION OF SIDEWALK.

PATH/SIDEWALK AND TREE LAWN DIMENSIONS VARY PER CARMEL CLAY COMPREHENSIVE PLAN (C3 PLAN).

REVISED 04-01-20

CITY OF CARMEL STANDARDS

RESIDENTIAL DRIVEWAY - DEPRESSED CURB

STANDARD DRAWING 10-21A

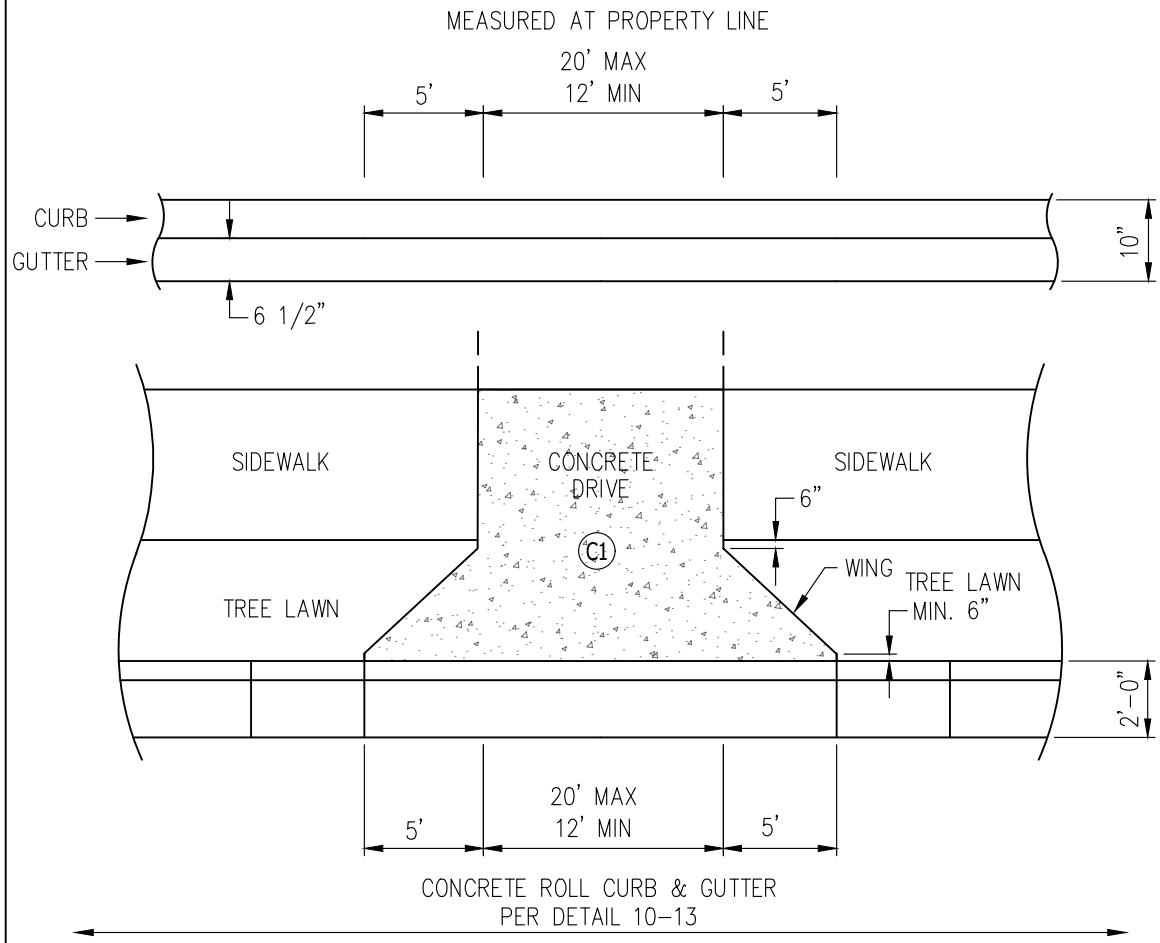

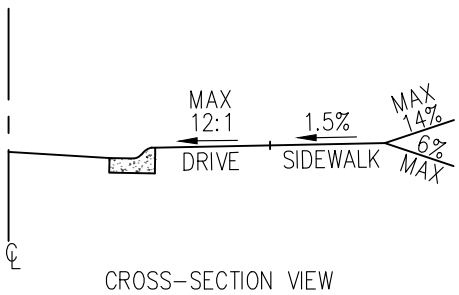

LEGEND

(C1) PCCP FOR APPROACH, 6" ON INDOT SUBGRADE TREATMENT, TYPE II

RESIDENTIAL DRIVEWAYS

NO SCALE

NOTES:
ANY EXISTING CURB, SHALL BE SAWCUT AT THE NEAREST JOINT TO THE REMOVAL LIMITS AND THE EXISTING CURB REMOVED.
WINGS SHALL BE SIZED AS NOTED REGARDLESS OF EXISTENCE OR LOCATION OF SIDEWALK
PATH/SIDEWALK AND TREE LAWN DIMENSIONS VARY PER CARMEL CLAY COMPREHENSIVE PLAN (C3 PLAN).

REVISED 04-01-20

CITY OF CARMEL STANDARDS

RESIDENTIAL DRIVEWAY CONCRETE ROLL CURB & GUTTER

STANDARD DRAWING 10-21B

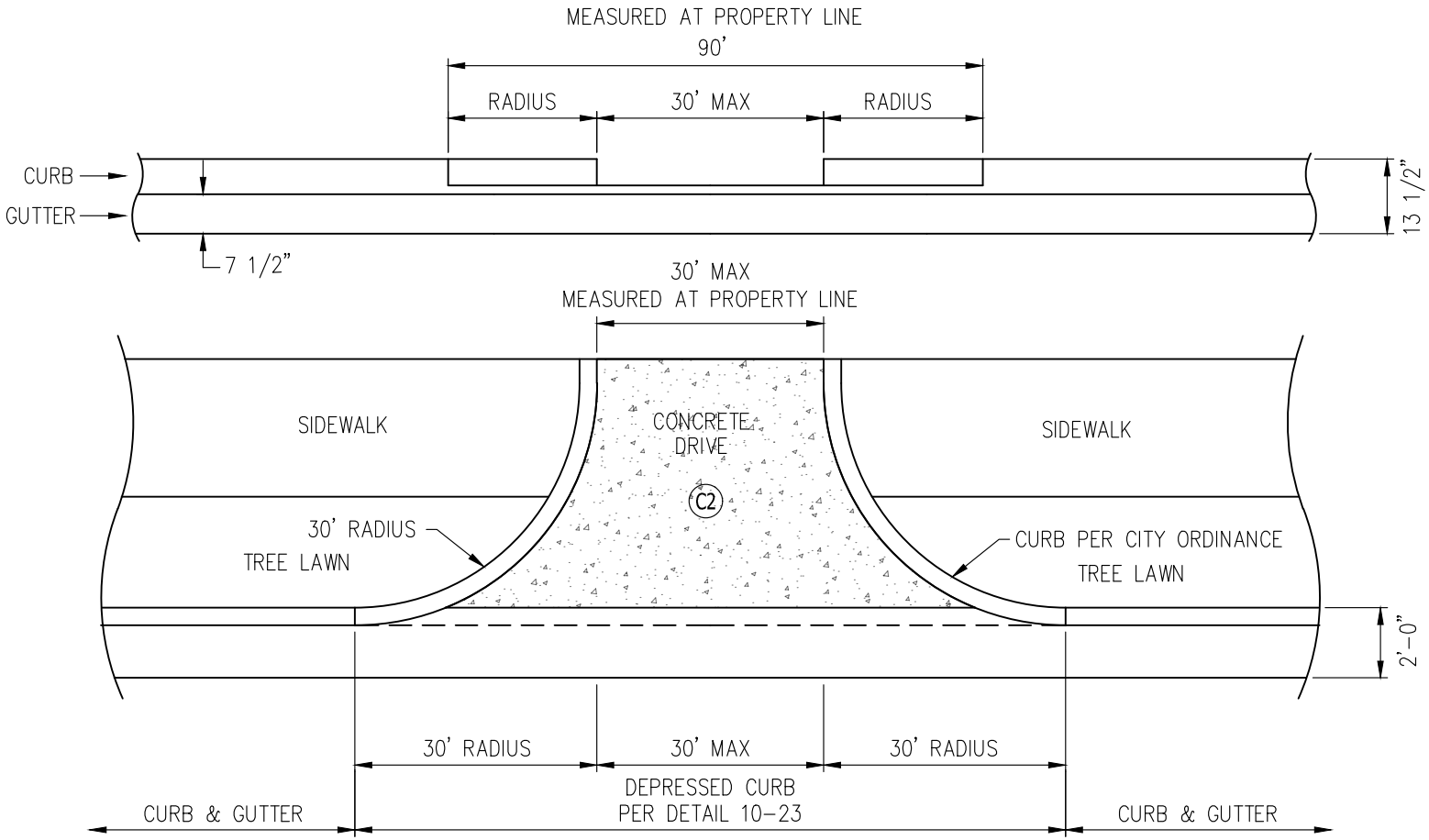

COMMERCIAL DRIVEWAYS

NO SCALE

LEGEND

C2 PCCP FOR APPROACH, 9" ON*
INDOT SUBGRADE TREATMENT, TYPE II

NOTES:

*CONCRETE DRIVE AND/OR SIDEWALK ACROSS DRIVE SHALL BE REINFORCED AS NEEDED BASED ON TRAFFIC EXPECTED TO ACCESS SITE.

ANY EXISTING CURB, SHALL BE SAWCUT AT THE NEAREST JOINT TO THE REMOVAL LIMITS AND THE EXISTING CURB REMOVED.

PROVIDE 30' RADIUS REGARDLESS OF SIDEWALK/PATH LOCATION.

PATH/SIDEWALK AND TREE LAWN DIMENSIONS VARY PER CARMEL CLAY COMPREHENSIVE PLAN (C3 PLAN).

REVISED 04-01-20

CITY OF CARMEL STANDARDS

COMMERCIAL DRIVEWAY DEPRESSED CURB

STANDARD DRAWING 10-22

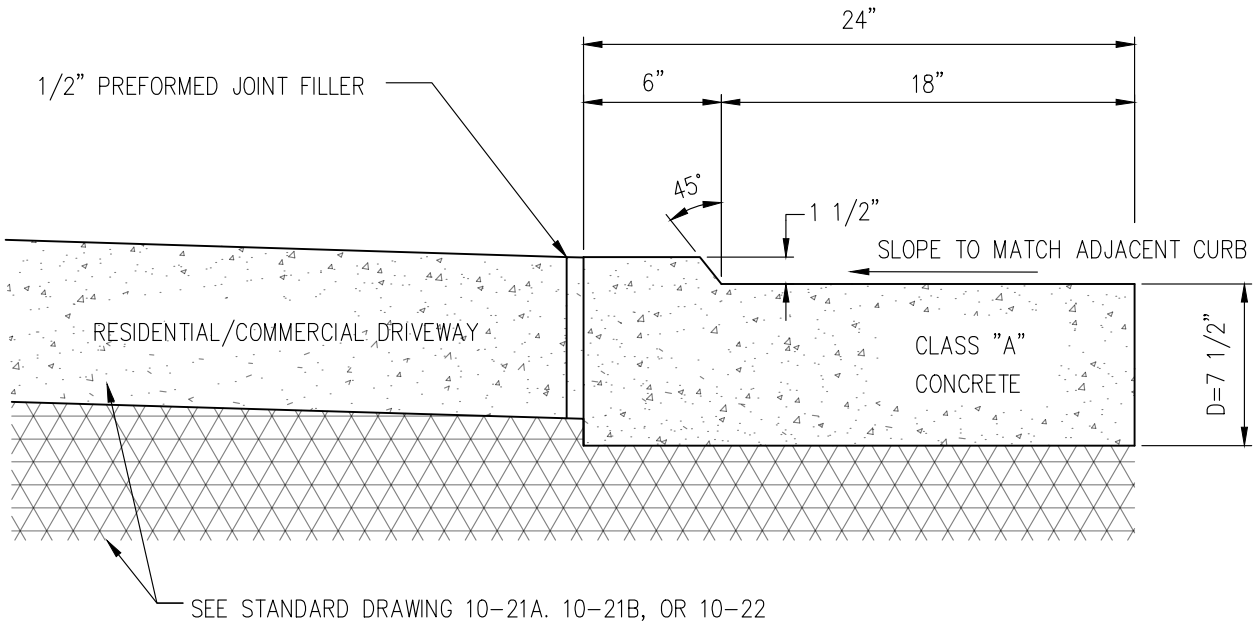

CONCRETE DRIVE WITH COMBINED
DEPRESSED CURB AND GUTTER

NO SCALE

REVISED 04-01-20

CITY OF CARMEL STANDARDS

DEPRESSED CURB & GUTTER DETAIL

STANDARD DRAWING 10-23

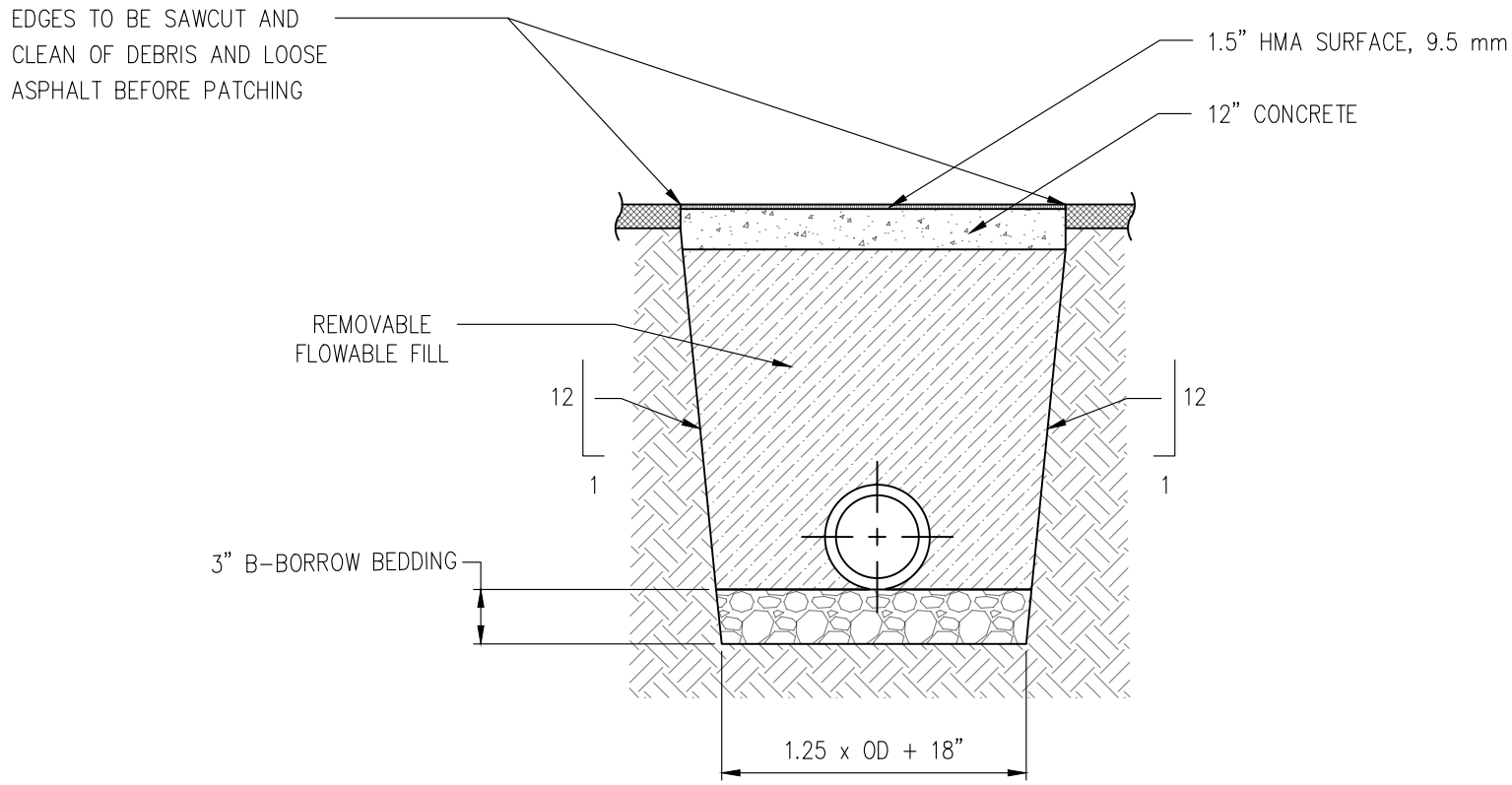

MULTI-USE PATH AND STREET CUT REPAIR DETAIL

NO SCALE

NOTES:

1. TRENCH SPOIL IS TO BE REMOVED FROM WORK SITE AND DISPOSED OF OUT OF THE RIGHT-OF-WAY
2. FLOWABLE FILL IS TO SERVE AS BACKFILL TO THE DIMENSION LISTED IN THIS DETAIL
3. THE EXISTING PAVEMENT IS TO BE TACK COATED PRIOR TO THE LAYING OF NEW ASPHALT. TACK COAT IS TO BE APPLIED AS SPECIFIED IN THE LATEST STANDARD OF INDOT SPECIFICATIONS, SECTION 406
4. THE NEW SURFACE IS TO BE SLOPED AT THE SAME RATE AS THE EXISTING SURFACE, ASPHALT TYPE SHALL MATCH ROAD CLASSIFICATION REQUIREMENTS.
5. FLOWABLE FILL SHALL CONFORM TO INDOT SPECIFICATION SECTION 213
6. IF PIPE IS PLASTIC OR HDPE: HAUNCHING AND INITIAL BACKFILL SHALL BE PER MANUFACTURER'S OR UTILITY RECOMMENDATIONS (TYP. #8 STONE TO 12" ABOVE TOP OF PIPE). FINAL BACKFILL SHALL BE FLOWABLE FILL UP TO 12" CONCRETE CAP.

CITY OF CARMEL STANDARDS

MULTI-USE PATH AND STREET CUT REPAIR DETAIL

STANDARD DRAWING 10-24

NOTES:

CONCRETE TO BE BROOM FINISHED PERPENDICULAR TO ROAD

TO BE IMPLEMENTED AS DIRECTED BY CITY ENGINEER. CONCRETE COLOR TO BE SLATE GREEN (PER TS FOR CONCRETE COLORING AND JOINTING) UNLESS OTHERWISE DIRECTED BY THE CITY OF CARMEL DEPARTMENT OF ENGINEERING.

TYPE D-1 CONTRACTION JOINTS NOT REQUIRED UNLESS OTHERWISE DIRECTED BY THE CITY OF CARMEL ENGINEERING DEPARTMENT.

TRUCK APRON

COLORED AND JOINTED CONCRETE, 7" ON
10" COMPACTED AGGREGATE, NO. 53, ON
INDOT SUBGRADE TREATMENT, TYPE IB OR IC

TRUCK APRON RADIAL JOINT DETAIL

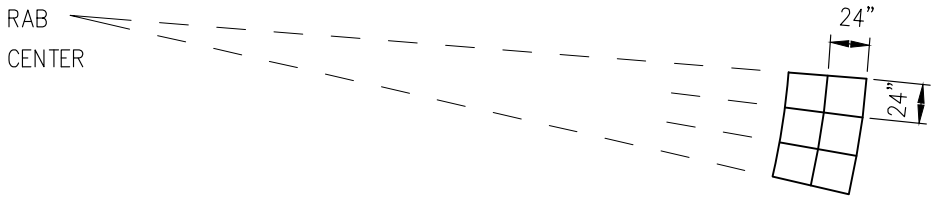

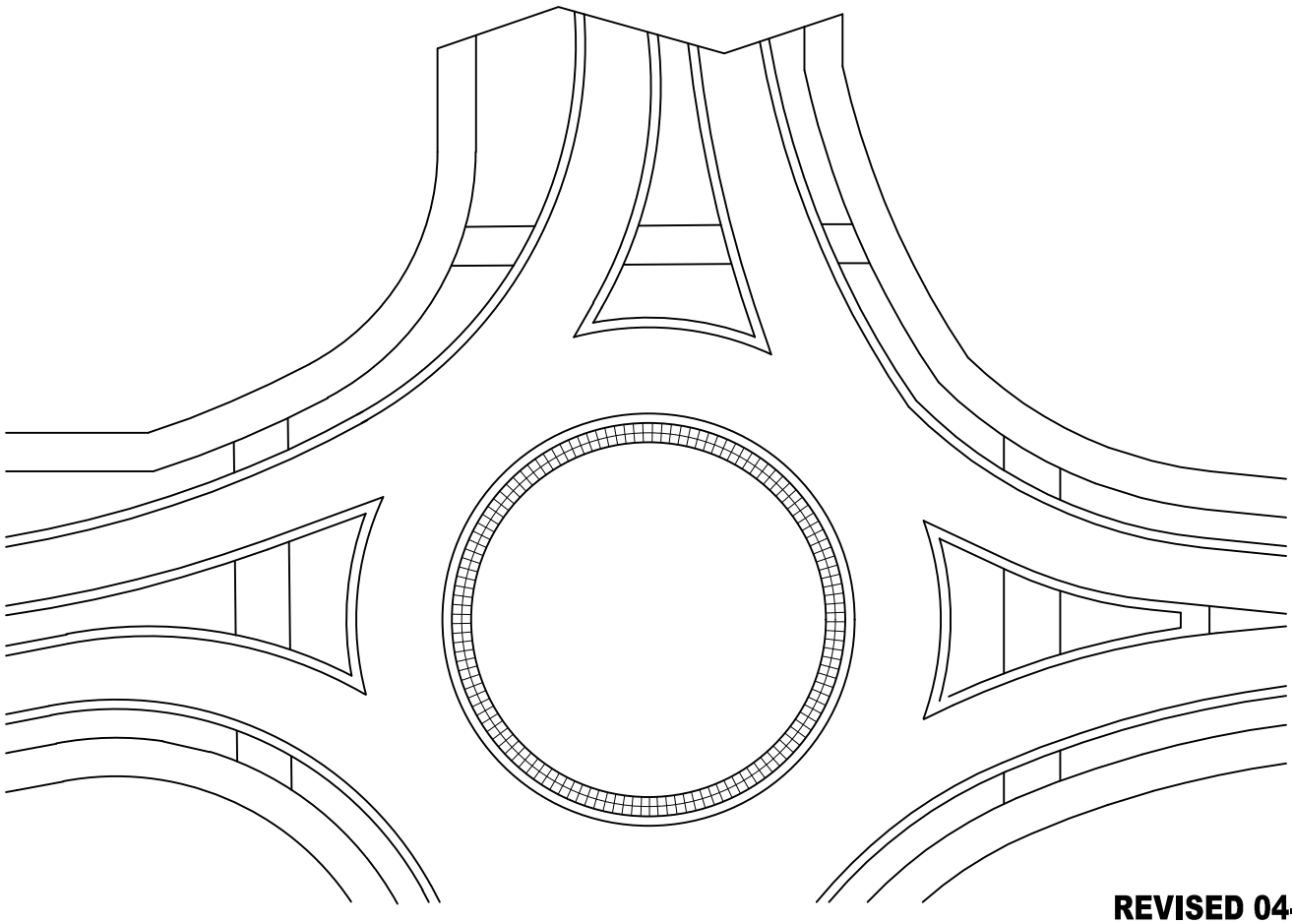

REVISED 04-01-20

STANDARD DRAWING 10-25A	CITY OF CARMEL STANDARDS
	ROUNDABOUT TRUCK APRON DETAILS

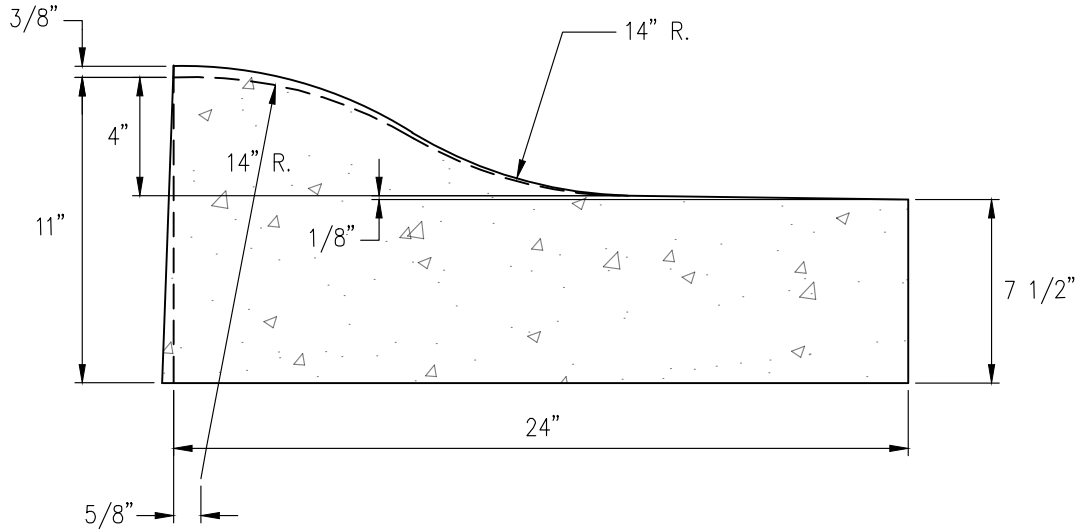

ROLL CURB FOR TRUCK APRON

NO SCALE

NOTES:

INTEGRAL CURB WITH CONCRETE PAVEMENT SHALL BE SIMILAR SHAPE

CURE ALL EXPOSED SURFACES

CONTRACTION JOINTS SHALL BE SAWCUT IN CONTINUOUSLY POURED CURBS TO A MINIMUM DEPTH OF 1/3"D

DAMPEN SUBGRADE BEFORE PLACING CONCRETE

CONTROL JOINTS EVERY 5' MAXIMUM ON RADII OTHERWISE EVERY 10', MAXIMUM. PREFORMED EXPANSION JOINTS MAXIMUM EVERY 50'

NO BACKFILLING OR COMPACTION MAY OCCUR 12' FROM CURB UNTIL 5 FULL DAYS HAVE PASSED AFTER PLACING CONCRETE

SHALL BE INSTALLED IN ACCORDANCE WITH INDOT STANDARD SPECIFICATIONS

REVISED 04-01-20

CITY OF CARMEL STANDARDS

ROLL CURB FOR TRUCK APRON

STANDARD DRAWING 10-25C

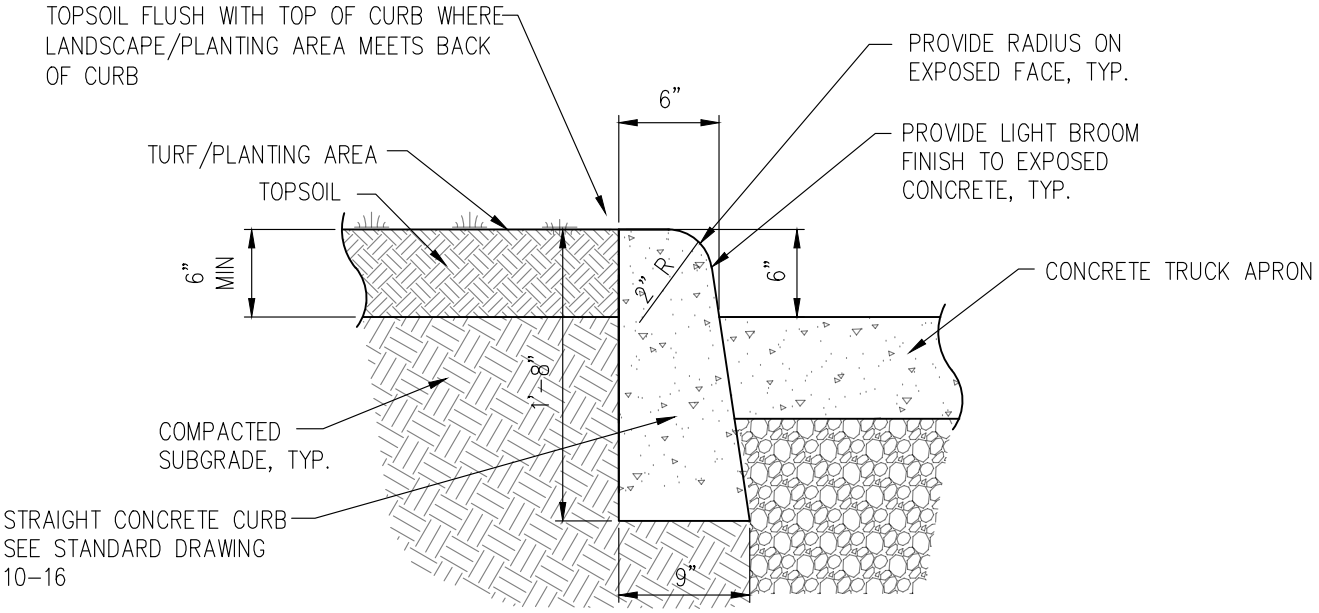

BARRIER CURB AT TRUCK APRON

NO SCALE

NOTE:
PROVIDE SAWCUT CONTROL JOINT FOR EVERY 6' – ALIGN CONTROL JOINTS W/EVERY THIRD (3RD) JOINT ON TRUCK APRON

REVISED 04-01-20

STANDARD DRAWING 10-25D	CITY OF CARMEL STANDARDS
	BARRIER CURB AT RAB TRUCK APRON DETAIL

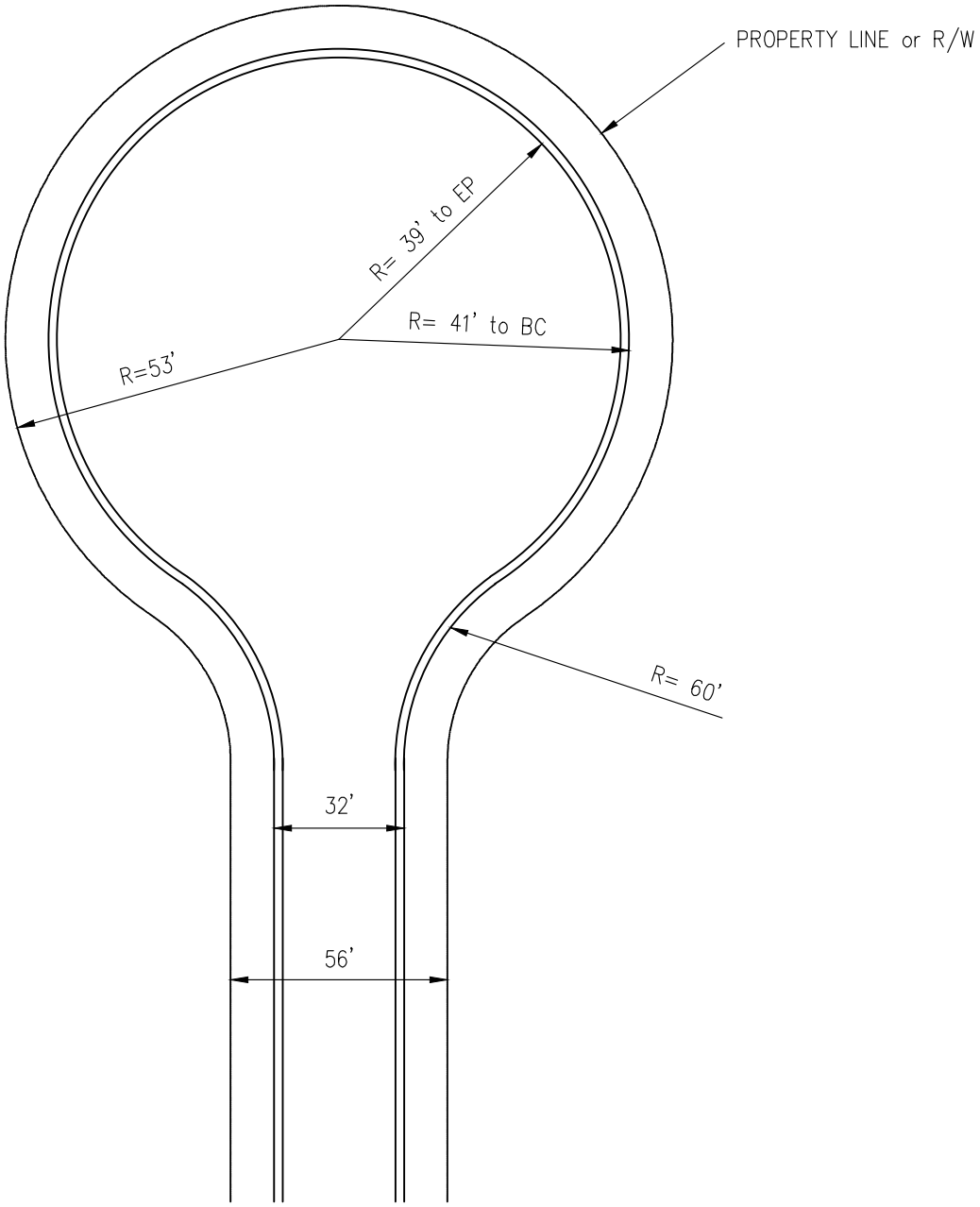

SUBDIVISION CUL-DE-SAC

NO SCALE

NOTES:

1. ELEVATIONS PROVIDED SHALL BE PROPOSED FLOW LINE OF GUTTER
2. ONE DETAIL SHALL BE PROVIDED FOR EACH CUL-DE-SAC AND INCLUDED IN THE CONSTRUCTION DRAWINGS
3. SCALE SHALL BE 1"= 40' OR LARGER
4. CENTER OF CUL-DE-SAC TO CENTERLINE OF INTERSECTING STREET SHALL NOT EXCEED 600'

STANDARD DRAWING 10-26	CITY OF CARMEL STANDARDS
	SUBDIVISION CUL-DE-SAC 'A'

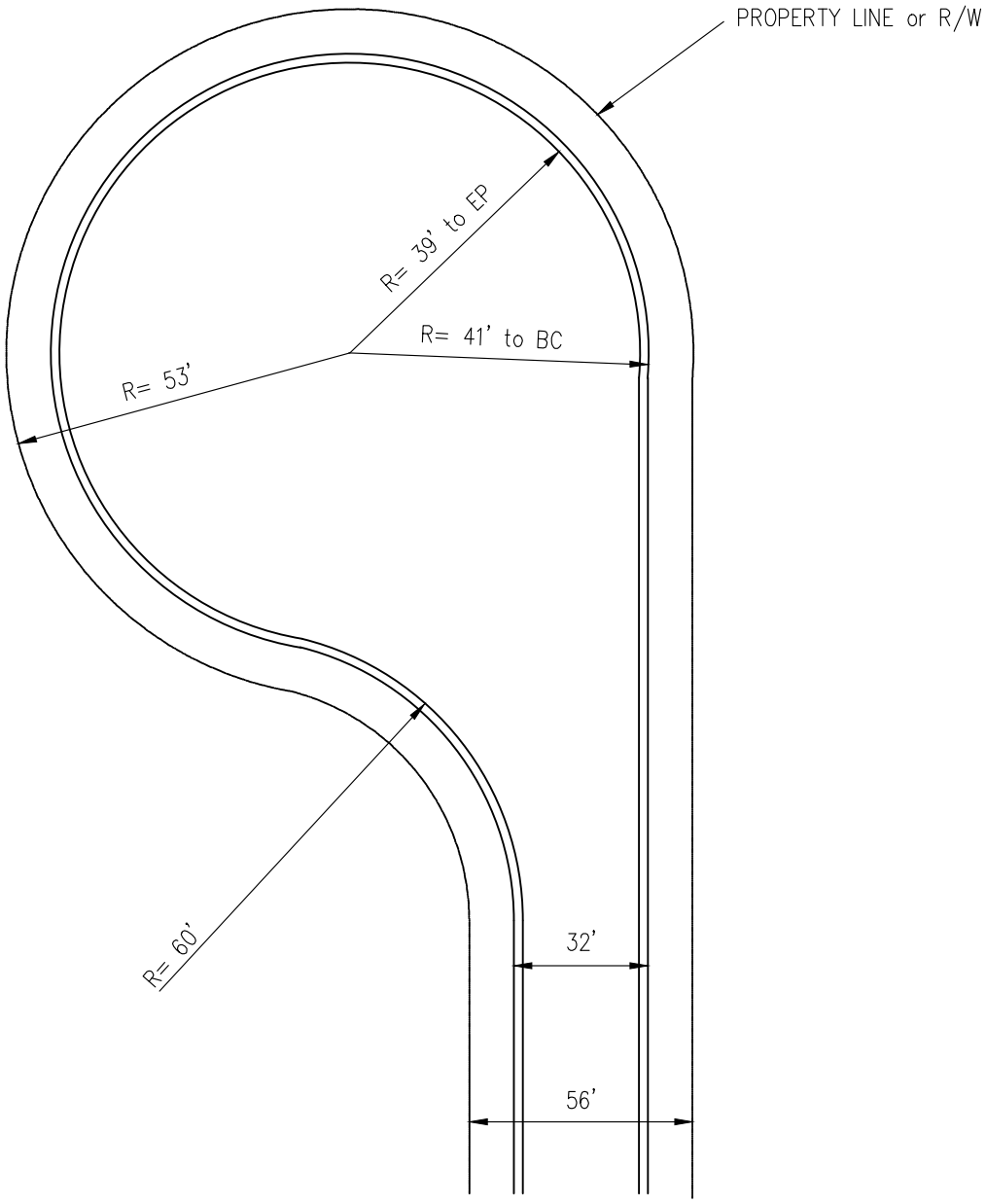

SUBDIVISION CUL-DE-SAC

NO SCALE

NOTES:

1. ELEVATIONS PROVIDED SHALL BE PROPOSED FLOW LINE OF GUTTER
2. ONE DETAIL SHALL BE PROVIDED FOR EACH CUL-DE-SAC AND INCLUDED IN THE CONSTRUCTION DRAWINGS
3. SCALE SHALL BE 1"= 40' OR LARGER
4. CENTER OF CUL-DE-SAC TO CENTERLINE OF INTERSECTING STREET SHALL NOT EXCEED 600'

STANDARD DRAWING 10-27	CITY OF CARMEL STANDARDS
	SUBDIVISION CUL-DE-SAC 'B'

LEGEND

(A) 1.5" HMA SURFACE, ON CONCRETE CAP, ON COMPACTED SUBGRADE

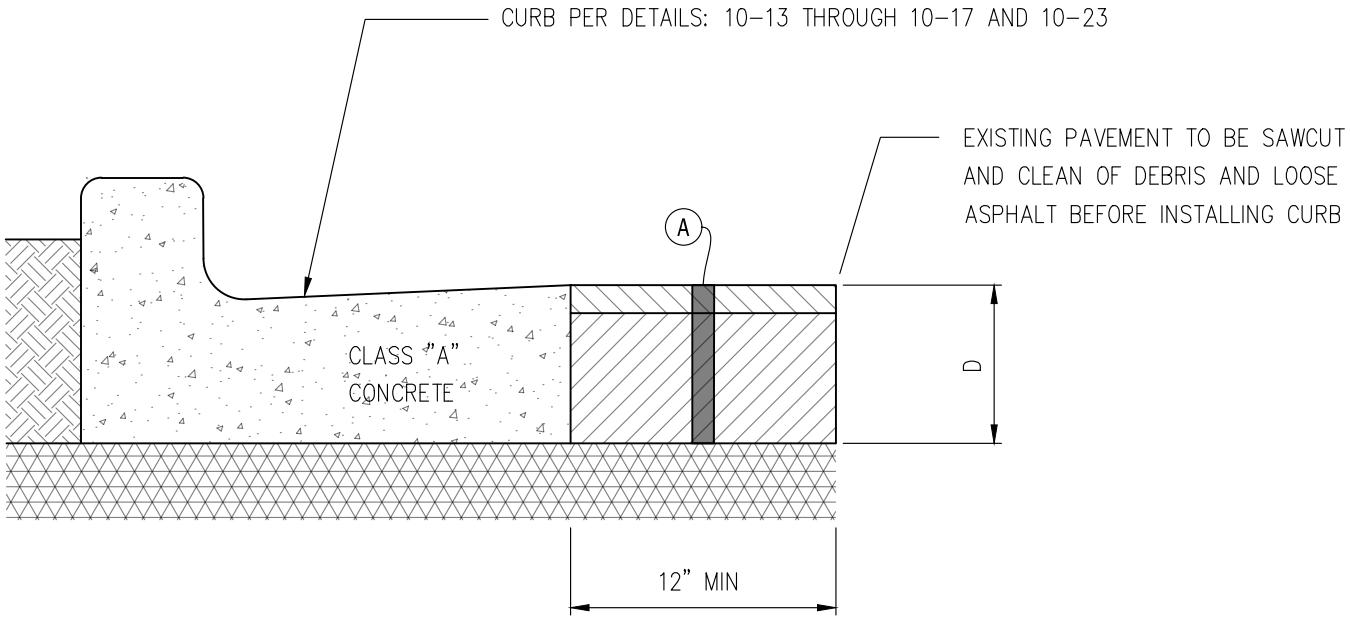

INSTALLING CURB ADJACENT TO EXISTING PAVEMENT

NO SCALE

NOTES:

INTEGRAL CURB WITH CONCRETE PAVEMENT SHALL BE SIMILAR SHAPE

CURE ALL EXPOSED SURFACES

CONTRACTION JOINTS SHALL BE SAWCUT IN CONTINUOUSLY POURED CURBS TO A MINIMUM DEPTH OF 1/3" D

DAMPEN SUBGRADE BEFORE PLACING CONCRETE

CONTROL JOINTS SAWCUT EVERY 5' MAXIMUM ON RADII OTHERWISE EVERY 10' MAXIMUM. PREFORMED EXPANSION JOINTS EVERY 50' MAXIMUM

NO BACKFILLING OR COMPACTION MAY OCCUR 12' FROM CURB UNTIL 5 FULL DAYS HAVE PASSED AFTER PLACING CONCRETE

EXISTING UNDERDRAIN AND FILTER FABRIC AND STONE DRAINAGE ENVELOPE SHALL BE PRESERVED

REVISED 04-01-20

CITY OF CARMEL STANDARDS

INSTALL CURB ADJACENT TO EXISTING PAVEMENT

STANDARD DRAWING 10-28

AFTER FUTURE CONNECTION HAS BEEN MADE POST SHALL BE CUT BELOW GRADE AND REMAIN.

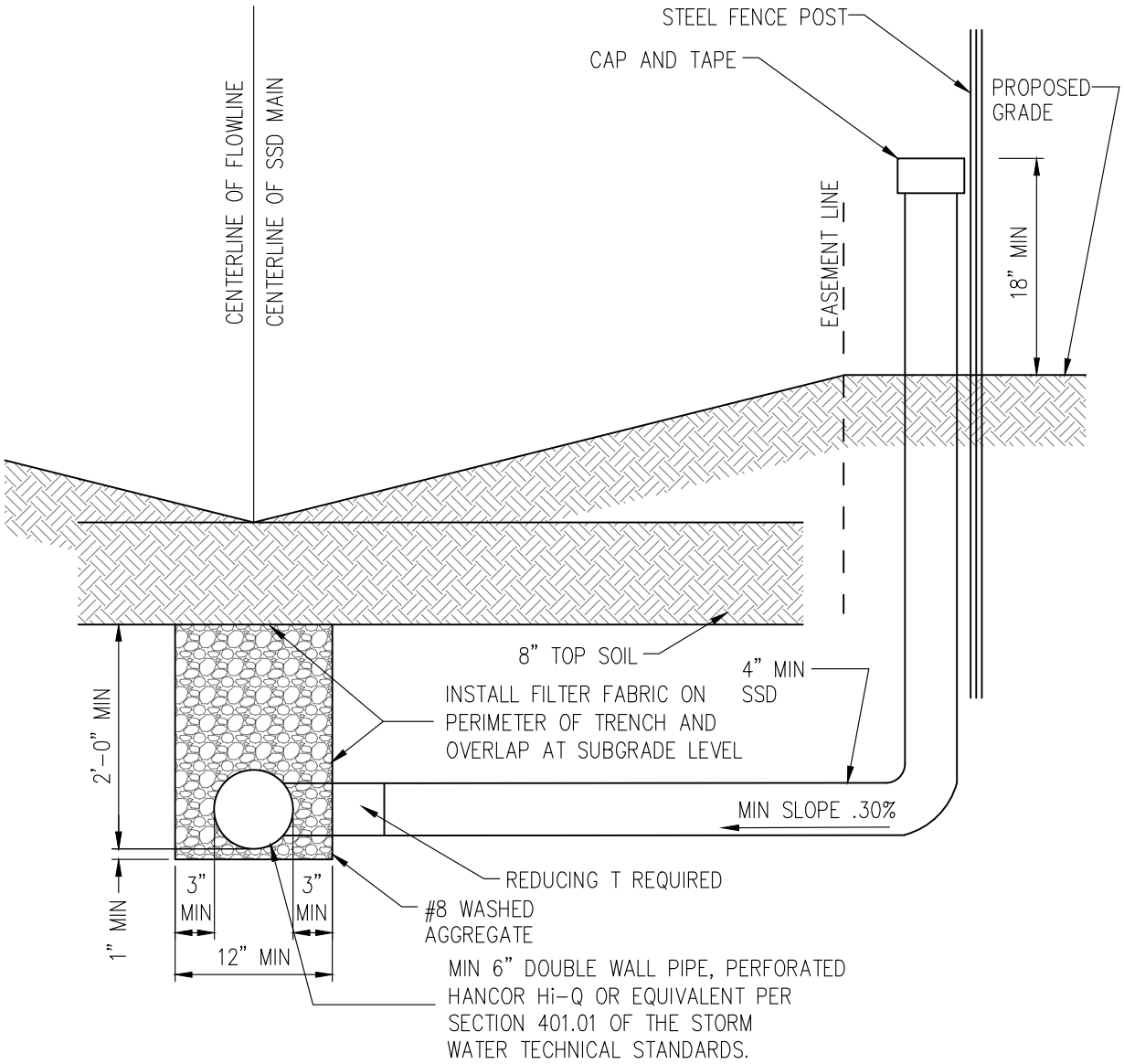

SSD LATERAL TO INDIVIDUAL LOTS IN REAR YARD

NO SCALE

NOTES:

PIPE SHALL CONFORM TO SPEC REQUIREMENTS OF SECTION 907 OF STANDARD SPECIFICATION

TEMPORARY EXTENSION ABOVE GROUND TO BE REMOVED UPON CONNECTION TO HOUSE

STANDARD DRAWING 10-29A	CITY OF CARMEL STANDARDS
	TYPICAL SSD LATERAL TO INDIVIDUAL LOTS IN REAR YARD

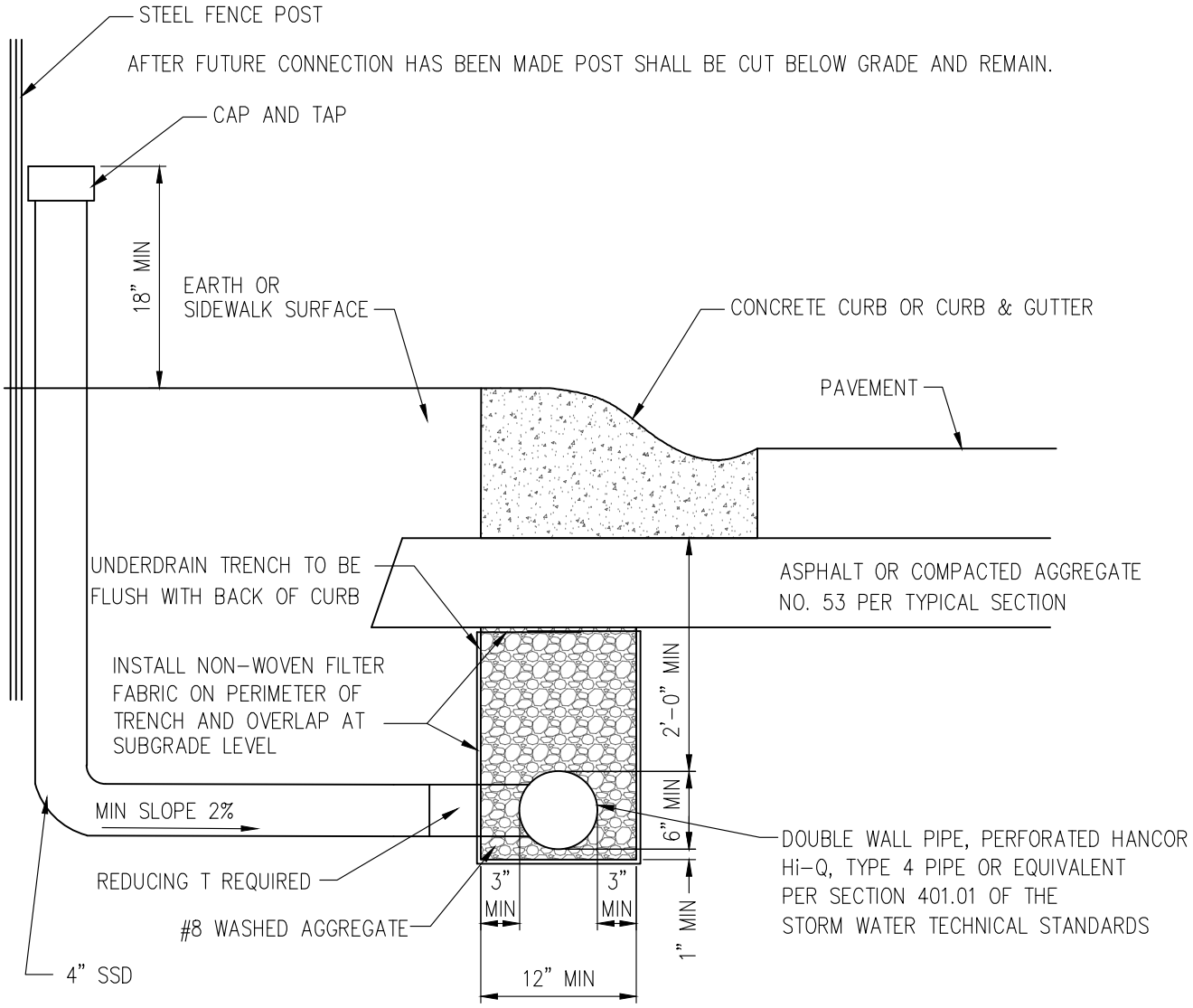

TYPICAL SSD LATERAL TO INDIVIDUAL LOTS UNDER CONCRETE CURB.

NO SCALE

NOTES:

PIPE SHALL CONFORM TO SPEC REQUIREMENTS OF SECTION 907 OF STANDARD SPECIFICATION

TEMPORARY EXTENSION ABOVE GROUND TO BE REMOVED UPON CONNECTION TO HOUSE

STANDARD DRAWING 10-29B	CITY OF CARMEL STANDARDS
	TYPICAL SSD TO INDIVIDUAL LOTS UNDER CONCRETE CURB

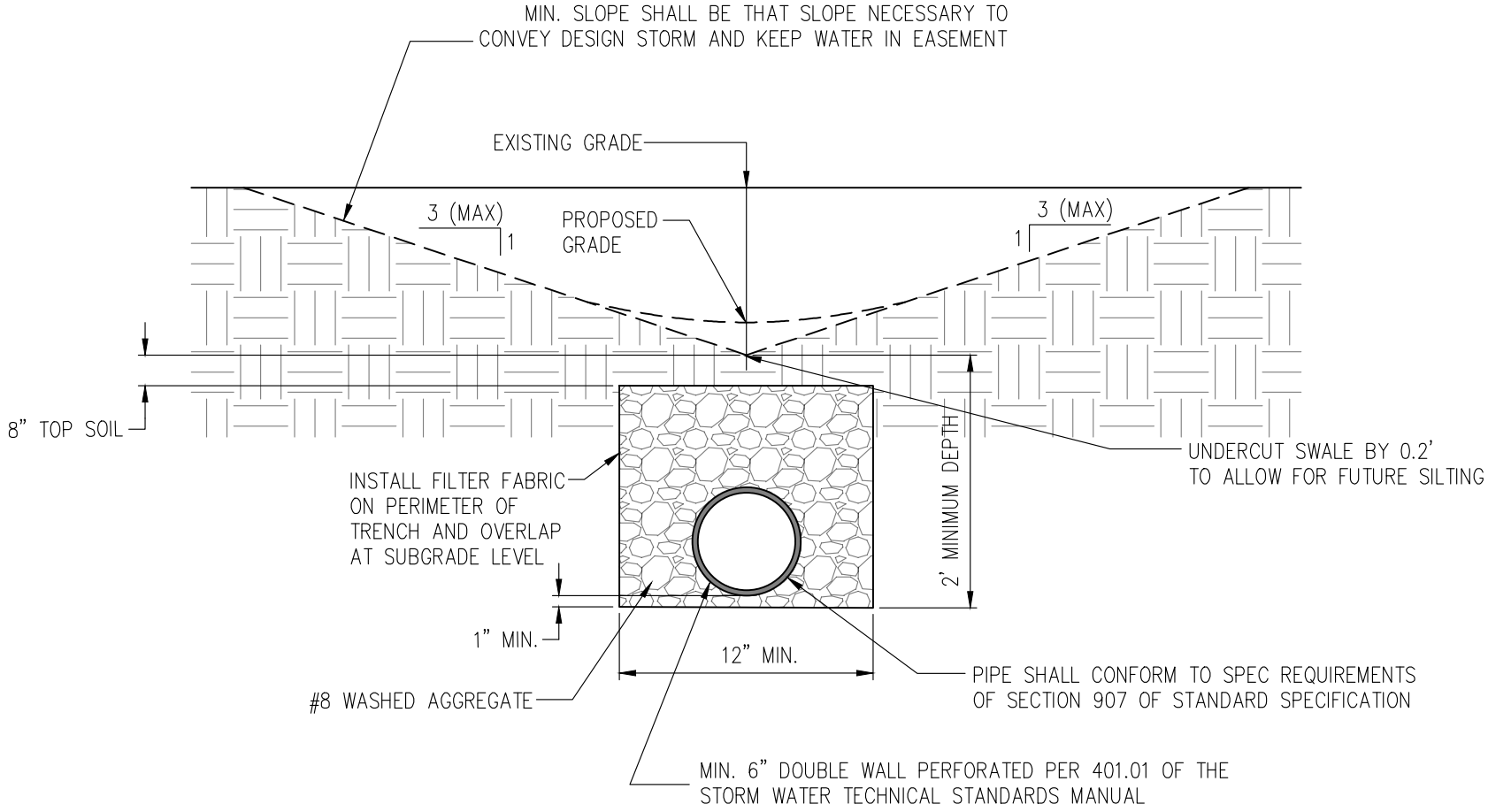

TYPICAL SWALE DETAIL

NO SCALE

CITY OF CARMEL STANDARDS

TYPICAL SWALE DETAILS

STANDARD DRAWING 10-30

TRENCH DETAIL FOR CITY STORM SEWERS

NO SCALE

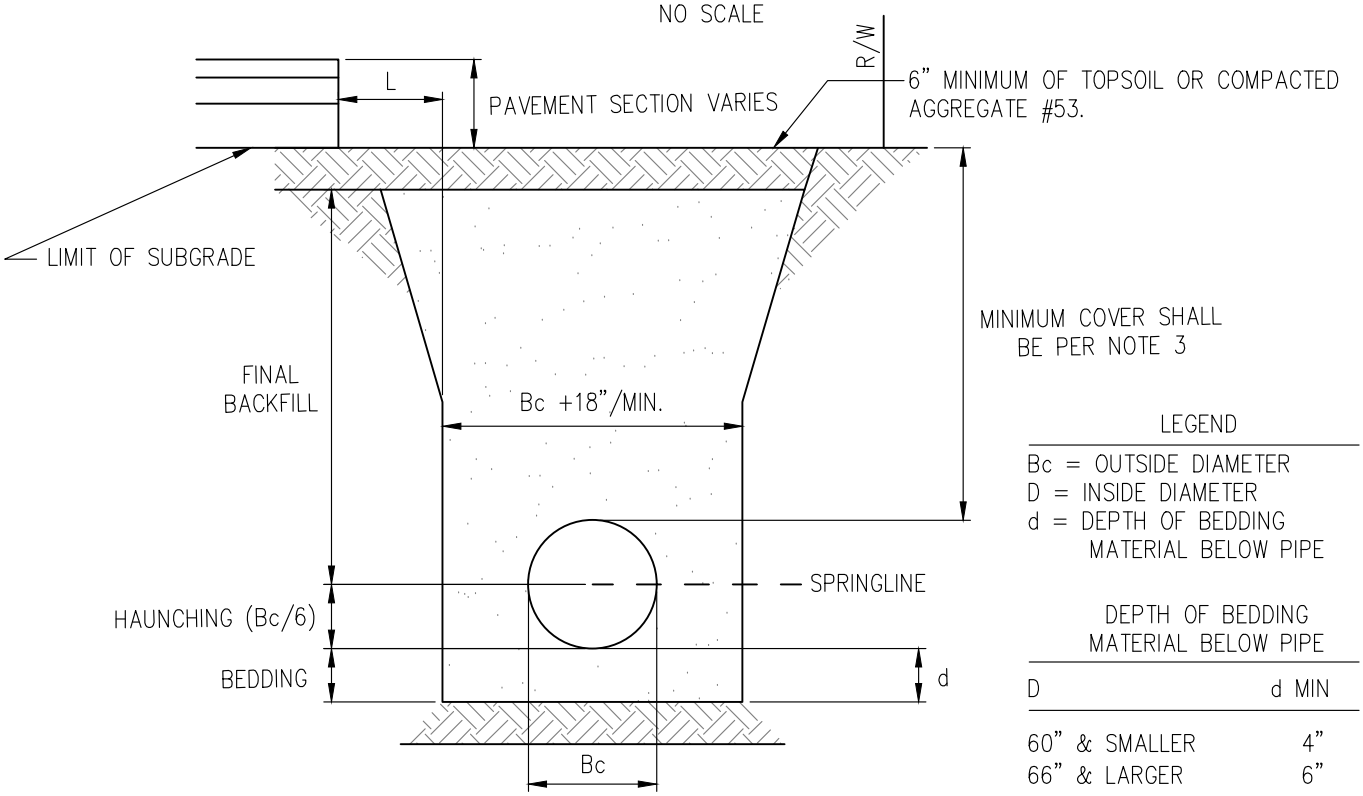

LEGEND

Bc = OUTSIDE DIAMETER
D = INSIDE DIAMETER
d = DEPTH OF BEDDING MATERIAL BELOW PIPE

DEPTH OF BEDDING MATERIAL BELOW PIPE

D	d MIN
60" & SMALLER	4"
66" & LARGER	6"

NOTES:

1. BEDDING AND HAUNCHING FOR ALL RCP INSTALLATIONS SHALL BE #8 STONE MEETING THE MATERIAL REQUIREMENTS OF THE INDOT. BEDDING SHALL BE PLACED IN THE TRENCH BOTTOM SUCH THAT AFTER THE PIPE IS INSTALLED TO GRADE AND LINE, THERE REMAINS A 4" MINIMUM DEPTH OF MATERIAL BELOW THE PIPE BARREL AND A MINIMUM OF 3" BELOW THE BELL. FOR PIPE SIZES 66" AND LARGER, THE MINIMUM DEPTH OF MATERIAL BELOW THE PIPE BARREL SHALL BE 6". BEDDING SHALL BE PLACED TO BE UNIFORM AS POSSIBLE, BUT SHALL BE LOOSELY PLACED UNCOMPACTED MATERIAL UNDER THE MIDDLE THIRD OF THE PIPE PRIOR TO PLACEMENT OF THE PIPE. IF THE UNDERLYING SOILS OF THE TRENCH BOTTOM ARE SOFT OR YIELDING, THE SOIL SHALL BE UNDERCUT TO SUCH A DEPTH THAT WHEN REPAIRED WITH #2 STONE IT WILL PRODUCE A UNIFORM AND STABLE FOUNDATION ALONG THE ENTIRE LENGTH OF THE PIPE. HAUNCHING AND INITIAL BACKFILL SHALL BE COMPACTED IN 8" MAXIMUM LIFTS TO NOT LESS THAN 90% STANDARD PROCTOR DENSITY FOR THE ENTIRE DEPTH OF THE MATERIAL PLACED. THE BACKFILL SHALL BE BROUGHT UP EVENLY ON BOTH SIDES OF THE PIPE FOR THE FULL LENGTH OF THE PIPE. HAUNCHING SHALL EXTEND TO THE SPRINGLINE OF THE PIPE. MINIMUM TRENCH WIDTH SHALL BE THE OUTSIDE DIAMETER OF THE PIPE PLUS 18".
2. FINAL BACKFILL FOR ALL RCP INSTALLATIONS WHERE "L" IS 5' OR LESS SHALL BE B-BORROW FOR STRUCTURE BACKFILL MEETING THE MATERIAL REQUIREMENTS OF THE INDOT AND SHALL BE COMPACTED IN 6" MAXIMUM LIFTS TO NOT LESS THAN 95% STANDARD PROCTOR DENSITY FOR THE ENTIRE DEPTH OF THE MATERIAL PLACED. THE BACKFILL FOR THE TOP 6" OF THE EXCAVATION BELOW THE LIMIT OF SUBGRADE SHALL BE #53 STONE MEETING THE MATERIAL REQUIREMENTS OF THE INDOT AND SHALL BE COMPACTED TO NOT LESS THAN 95% STANDARD PROCTOR DENSITY. FINAL BACKFILL FOR ALL RCP INSTALLATIONS WHERE "L" IS GREATER THAN 5' SHALL BE CLEAN FILL MATERIAL FREE OF ROCKS LARGER THAN 6" IN DIAMETER, FROZEN LUMPS OF SOIL, WOOD OR OTHER EXTRANEOUS MATERIAL, COMPACTED IN 12" MAXIMUM LIFTS TO NOT LESS THAN 90% STANDARD PROCTOR DENSITY FOR THE ENTIRE DEPTH OF THE EXCAVATION. CONTRACTOR SHALL PROVIDE A 3rd PARTY TESTING AGENCY TO PROVIDE COMPACTION TESTING AS NECESSARY.
3. FOR INSTALLATION OF STORM MAINS, WATERMAINS, SANITARY MAINS, WATER SERVICE LATERALS, AND SANITARY SERVICE LATERALS UNDER CITY STREETS, REGARDLESS OF THE JURISDICTION OF THE UTILITY, THE MINIMUM COVER FROM THE TOP OF THE INSTALLED PAVEMENT OR FINAL GROUND ELEVATION TO THE TOP OF THE INSTALLED PIPE SHALL BE NO LESS THAN 2.5 FEET OF COVER ALONG ANY PART OF THE PIPE. IF THE STANDARD PRACTICE OF THE UTILITY THAT HAS JURISDICTION OVER THE INSTALLATION HAS A MORE STRINGENT COVER REQUIREMENT, THE MORE STRINGENT REQUIREMENT SHALL GOVERN.
4. IF EXISTING SUBGRADE HAS BEEN LIME STABILIZED, BACKFILL WITH B-BORROW TO BOTTOM OF EXISTING SUBGRADE AND FILL TO THE LIMIT OF EXISTING SUBGRADE WITH COMPACTED AGGREGATE NO 53.
5. THESE STANDARDS SHALL APPLY FOR STORM SEWERS INSTALLED WITHIN EXISTING AND PROPOSED CITY R/W AND FOR STORM SEWERS THAT SHALL BE MAINTAINED BY THE CITY, REGARDLESS OF STORM SEWER JURISDICTION.
6. ALL STORM PIPE WITHIN EXISTING OR PROPOSED CITY R/W SHALL BE REINFORCED CONCRETE PIPE REGARDLESS OF JURISDICTION OVER STORM PIPES.

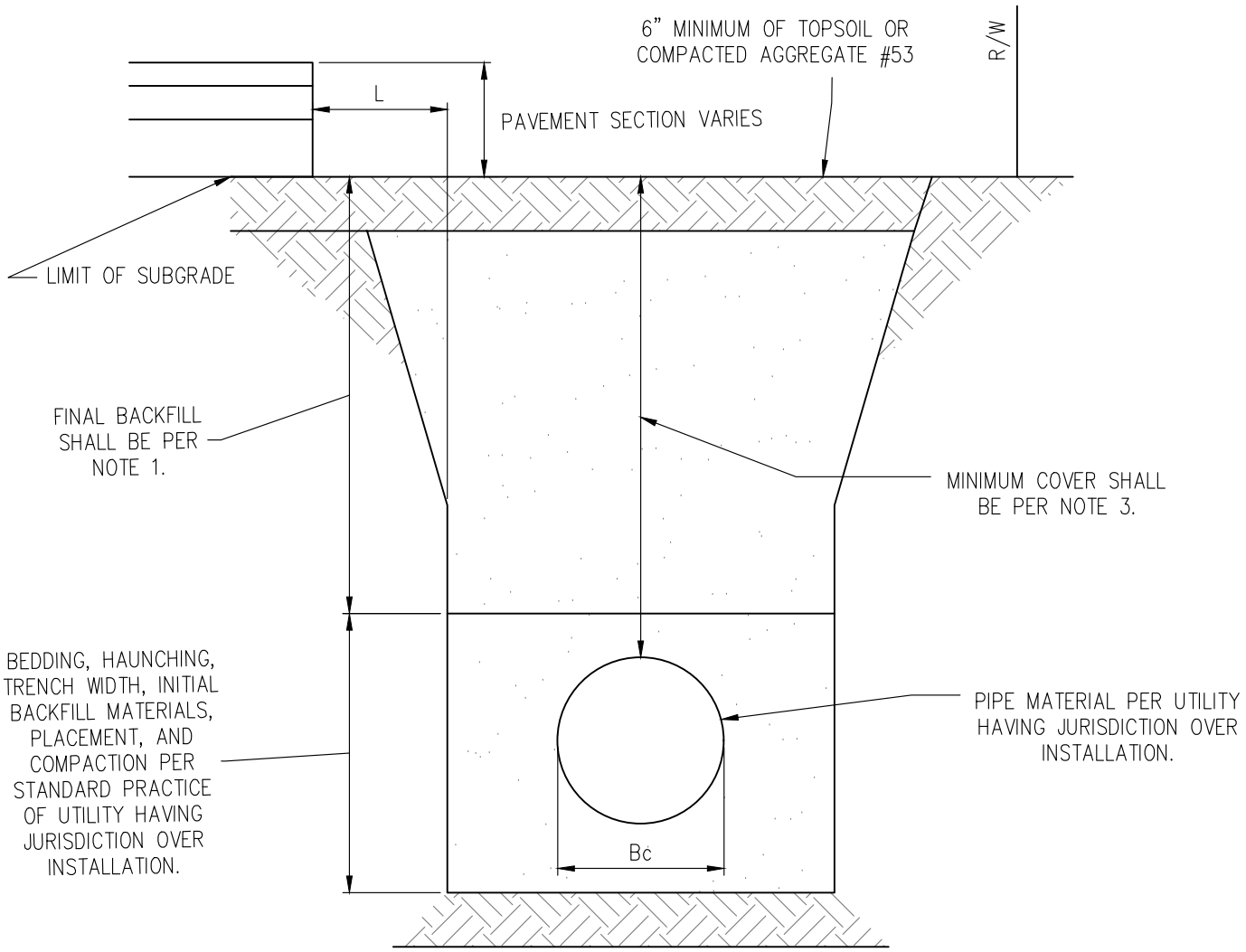

WATER & SEWER MAIN AND LATERAL TRENCH DETAIL FOR UTILITY INSTALLATIONS WITHIN CITY R/W

NO SCALE

NOTES:

1. FINAL BACKFILL FOR UTILITY INSTALLATIONS WHERE "L" IS 5' OR LESS SHALL BE B-BORROW FOR STRUCTURE BACKFILL MEETING THE MATERIAL REQUIREMENTS OF THE INDOT AND SHALL BE COMPACTED IN 6" MAXIMUM LIFTS TO NOT LESS THAN 95% STANDARD PROCTOR DENSITY FOR THE ENTIRE DEPTH OF THE MATERIAL PLACED. THE BACKFILL FOR THE TOP 6" OF THE EXCAVATION BELOW THE LIMIT OF SUBGRADE SHALL BE #53 STONE MEETING THE MATERIAL REQUIREMENTS OF THE INDOT AND SHALL BE COMPACTED TO NOT LESS THAN 95% STANDARD PROCTOR DENSITY FOR THE ENTIRE DEPTH OF THE MATERIAL PLACED. IF THE STANDARD PRACTICE OF THE UTILITY THAT HAS JURISDICTION OVER THE INSTALLATION HAS A MORE STRINGENT FINAL BACKFILL REQUIREMENT, THE MORE STRINGENT REQUIREMENT WILL GOVERN. CONTRACTOR SHALL PROVIDE A 3rd PARTY TESTING AGENCY TO PROVIDE COMPACTION TESTING AS NECESSARY.
2. THIS REQUIREMENT SHALL APPLY FOR ALL UTILITY INSTALLATIONS (INCLUDING BUT NOT LIMITED TO WATER MAINS, WATER SERVICE LATERALS, SANITARY MAINS, SANITARY SERVICE LATERALS, GAS PIPING, POWER, TELECOMM AND CATV CONDUITS OR DUCT BANK) WITHIN EXISTING AND PROPOSED CITY OF CARMEL R/W LIMITS.
3. FOR UTILITY INSTALLATIONS UNDER CITY STREETS, REGARDLESS OF THE JURISDICTION OF THE UTILITY, THE MINIMUM COVER FROM THE TOP OF THE INSTALLED PAVEMENT OR FINAL GROUND ELEVATION TO THE TOP OF THE INSTALLED PIPE CONDUIT OR DUCT BANK SHALL BE NO LESS THAN 2.5 FEET. IF THE STANDARD PRACTICE OF THE UTILITY THAT HAS JURISDICTION OVER THE INSTALLATION HAS A MORE STRINGENT COVER REQUIREMENT, THE MORE STRINGENT REQUIREMENT SHALL GOVERN.
4. IF EXISTING SUBGRADE HAS BEEN LIME STABILIZED, BACKFILL WITH B-BORROW TO BOTTOM OF EXISTING SUBGRADE AND FILL TO THE LIMIT OF TREATED SUBGRADE WITH COMPACTED AGGREGATE, NO 53.

STANDARD DRAWING 10-32	CITY OF CARMEL STANDARDS
	WATER & SEWER MAIN AND LATERAL TRENCH DETAIL FOR UTILITY INSTALLATIONS WITHIN CITY R/W

STANDARD INTERSECTION

NO SCALE

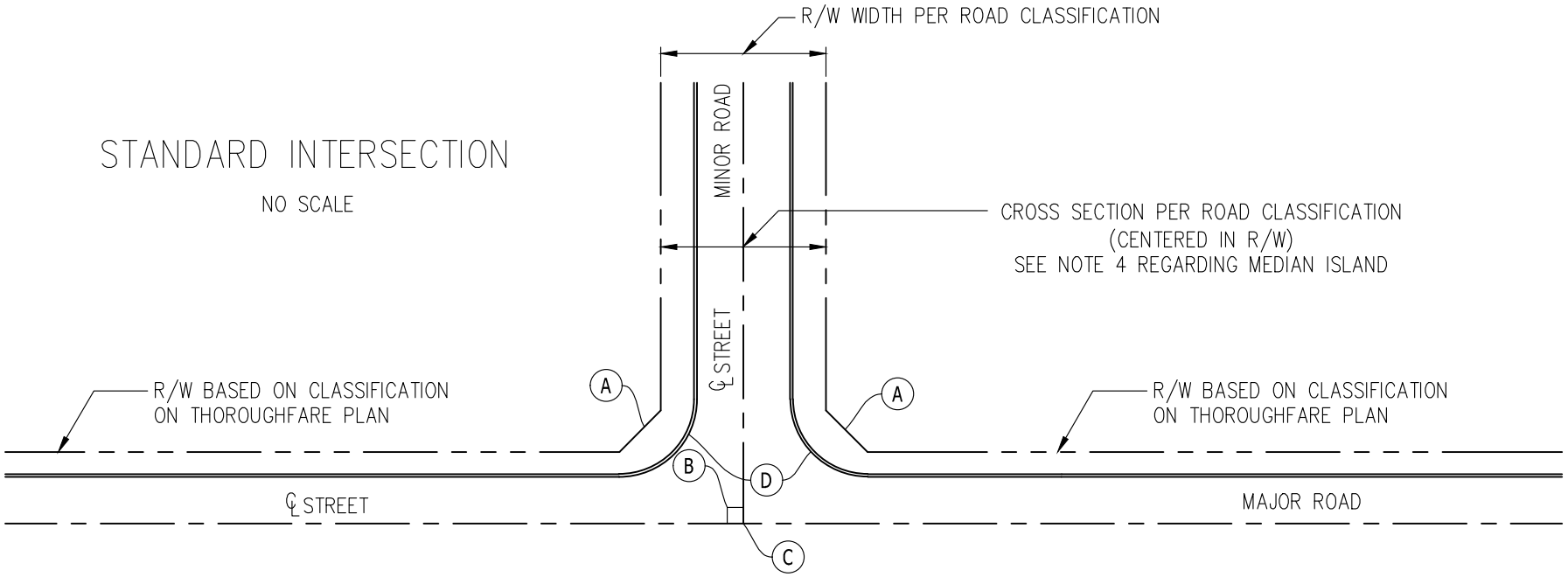

NOTES:

1. IF A ROUNDABOUT IS PLANNED AT INTERSECTION, ADEQUATE R/W SHALL BE PROVIDED AS REQUIRED BY THE DEPARTMENT OF ENGINEERING
2. WHERE SUBDIVISION ACCESS IS FROM A PRIMARY OR SECONDARY THOROUGHFARE, OR A COLLECTOR STREET, ACCELERATION/DECELERATION LANES AND A PASSING LANE SHALL BE PROVIDED AT EACH INTERSECTION. SEE STANDARD DRAWING 10-35 FOR DIMENSIONS.
3. INTERSECTION OFFSET POINT SHALL BE LOCATED SUCH THAT THE OPPOSING LEFT TURN LANES ARE ALIGNED.
4. MEDIAN ISLAND WILL ONLY BE APPROVED IF STANDARD CROSS SECTION BASED ON CLASSIFICATION OF MINOR ROADWAY ALLOWS FOR A MEDIAN ISLAND. IF MEDIAN ISLAND IS ALLOWED AND WILL BE INSTALLED, REFER TO MEDIAN ISLAND AT SUBDIVISION OR COMMERCIAL AREA ENTRANCE DETAIL FOR ADDITIONAL REQUIREMENTS.

(A) 20' RADIUS INSCRIBED BY R/W LINES FOR LOCAL-LOCAL,
TRIANGULAR AREA WITH TWO 30' SIDES FOR LOCAL-COLLECTOR OR
TRIANGULAR AREA WITH TWO 50' SIDES FOR ARTERIAL/PARKWAY

(B) ANGLE OF INTERSECTION OF MINOR ROAD SHALL BE 90 DEGREES WHEN POSSIBLE, BUT NOT LESS THAN 75 DEGREES. JUSTIFICATION SHALL BE PROVIDED IF ANGLE IS NOT 90 DEGREES.

(C) INTERSECTION OFFSET POINT. FOR ACCESS FROM A MAJOR ROAD WHICH IS A COLLECTOR, PARKWAY OR ARTERIAL THIS POINT SHALL BE AT LEAST 500' FROM THE NEAREST MAJOR ROAD INTERSECTION WITH ANOTHER MAJOR OR MINOR ROAD. THIS POINT SHALL BE ALIGNED WITH AN EXISTING MINOR ROAD OR EXISTING ENTRANCE, COMMERCIAL ACCESS POINT WITHIN THE LIMITS OF THE FRONTAGE. IF ALIGNMENT IS NOT POSSIBLE, THE OFFSET DISTANCE BETWEEN THIS POINT AND SIMILAR POINT ON EXISTING ACCESS SHALL BE MAXIMIZED; BUT SHALL BE A MINIMUM OF 200' PROVIDED THAT THE 500' MINIMUM DISTANCE IS STILL SATISFIED. IF INTERSECTION IS WITHIN A LOCAL ROAD NETWORK AND ALIGNMENT WITH AN EXISTING COMMERCIAL ACCESS POINT OR MINOR ROAD IS NOT POSSIBLE, A MINIMUM 150' SEPARATION SHALL BE PROVIDED.

(D) 20' LOCAL-LOCAL, 40' LOCAL-ALL OTHER

CITY OF CARMEL STANDARDS

STANDARD INTERSECTION

STANDARD DRAWING 10-33

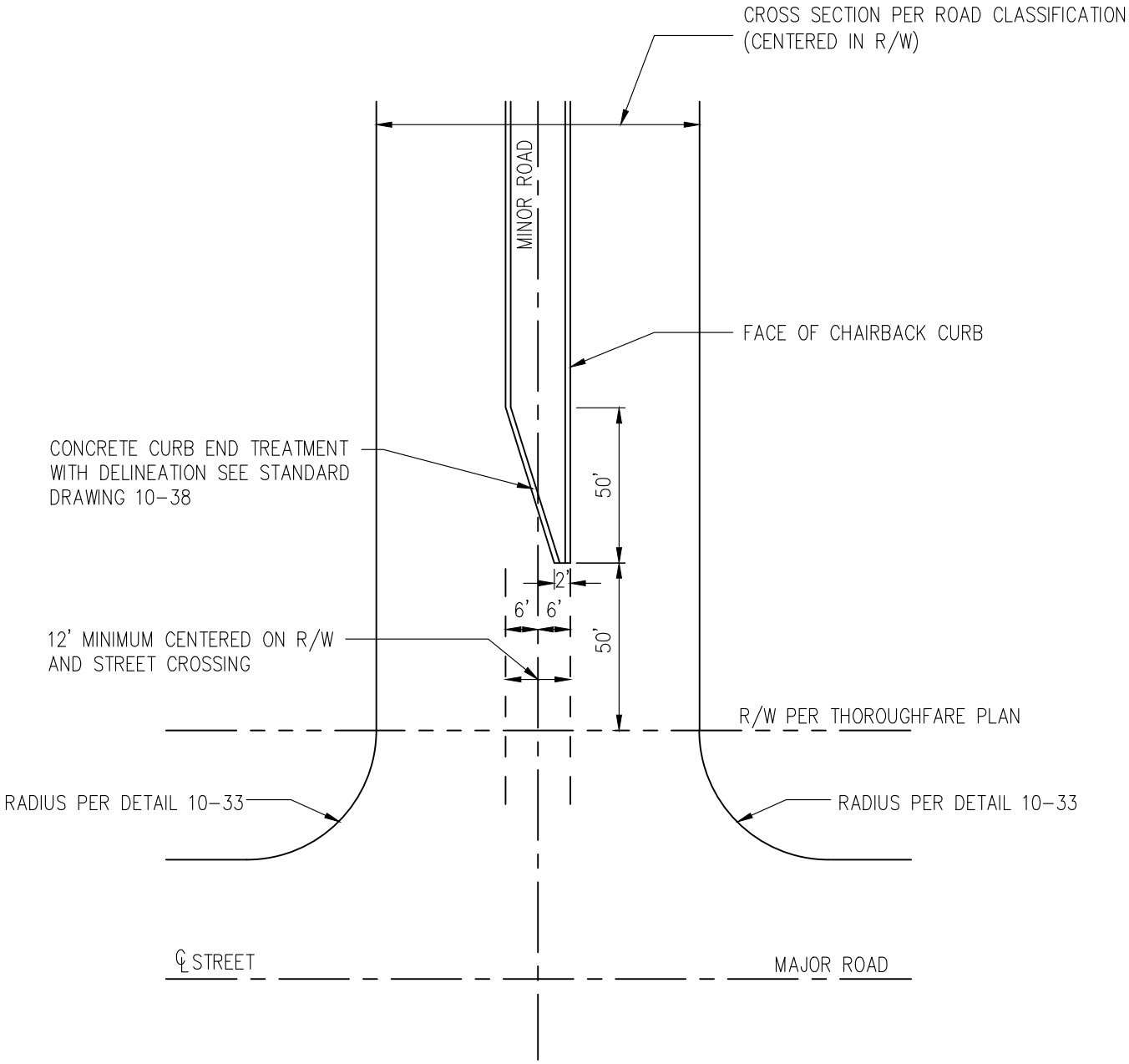

MEDIAN ISLAND AT LOCAL ROAD
INTERSECTION WITH MAJOR ROAD

NO SCALE

STANDARD DRAWING 10-34	CITY OF CARMEL STANDARDS
	MEDIAN ISLAND AT SUBDIVISION OR COMMERCIAL ENTRANCE

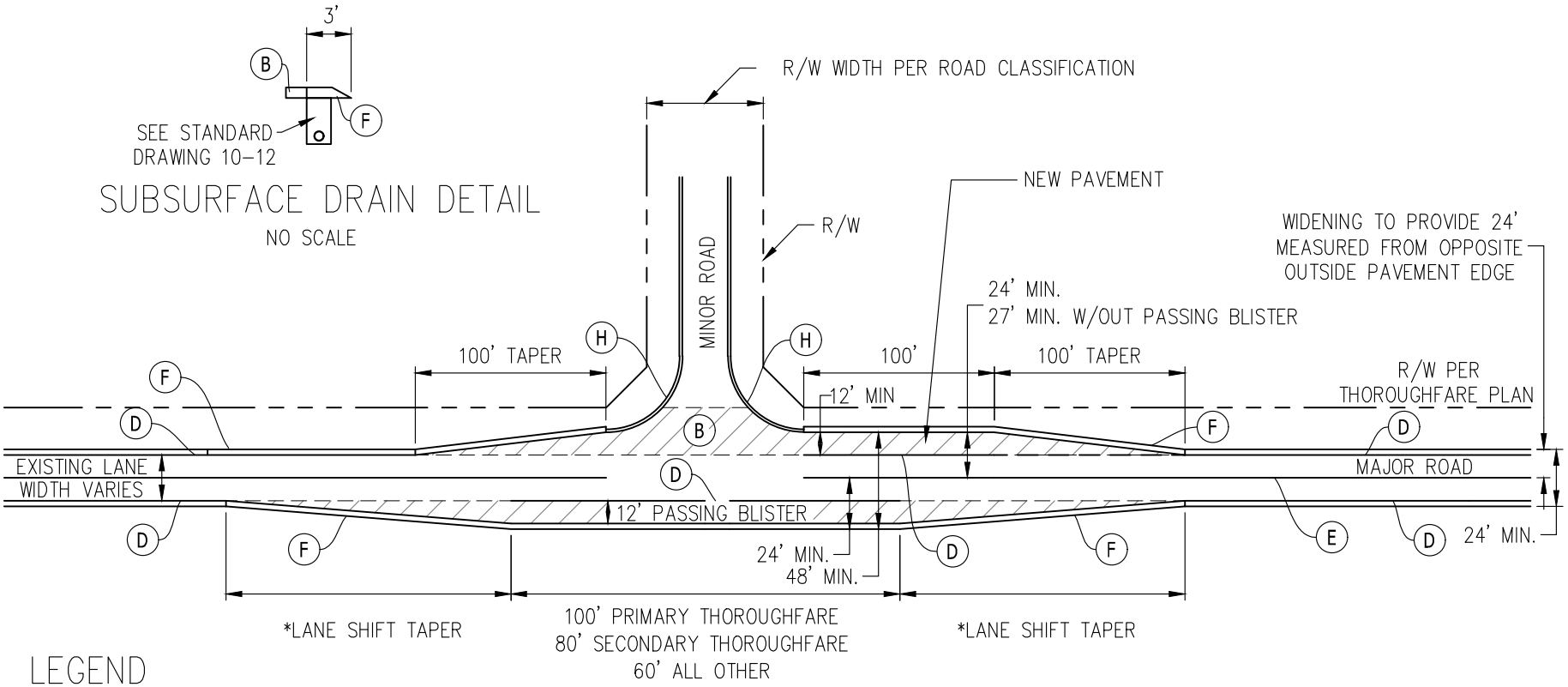

LEGEND

- (B) PAVEMENT SECTION PER ROAD CLASSIFICATION BACK TO RIGHT OF WAY.
- (D) 4" THERMOPLASTIC SOLID WHITE
- (E) 4" THERMOPLASTIC DOUBLE YELLOW FOR ENTIRE RESURFACING AREA
- (F) 6", COMPACTED AGGREGATE #73, ON COMPACTED SUBGRADE
- (H) 40' MINIMUM RADIUS SHALL BE PROVIDED REGARDLESS OF MAJOR/MINOR ROAD CLASSIFICATION.

NOTES:

1. CONSTRUCTION PLANS SHALL INCLUDE CENTERLINE PROFILE OF EXISTING ROAD BEING INTERSECTED BY THE ENTRANCE. THE PROFILE SHALL EXTEND A MINIMUM OF 500' EACH DIRECTION FROM ENTRANCE CENTERLINE. LOCATION OF MINOR ROAD SHALL BE SUCH THAT SSD ON MAJOR ROAD IS PROVIDED.
2. THE CITY ENGINEER, AT ITS DISCRETION, MAY REQUIRE THE CONNECTION OF AUXILIARY LANES BETWEEN DEVELOPMENTS, EVEN IF WORK EXCEEDS THAT REQUIRED ON THIS DETAIL
3. AUXILIARY LANES (ACCELERATION TAPER, DECLARATION TAPER, DECLARATION LANE AND PASSING BLISTER) ARE REQUIRED AT ALL SUBDIVISION ENTRANCES WHERE R/W EXISTS PURSUANT TO CITY OF CARMEL ORDINANCES.
4. MILL THE FULL WIDTH OF THE EXISTING PAVEMENT 1.5" AND RESURFACE WITH 1.5" HMA SURFACE, 9.5mm. WORK SHALL EXTEND ACROSS ENTIRE FRONTAGE OF PROPERTY OR TO LIMITS OF AUXILIARY LANES, WHICHEVER IS GREATER.
5. IF THESE DIMENSIONS CONFLICT WITH THE DIMENSIONS PRESENTED IN CITY OF CARMEL ORDINANCES, THE REQUIREMENTS RESULTING IN LARGER DIMENSIONS SHALL APPLY.
6. WHEN PRESENT, GRAVEL SHOULDERS (F) SHALL BE 3' WIDE.
7. WIDENING SHALL BE PROVIDED EVEN IF AUXILIARY LANES ARE NOT REQUIRED.

* LANE SHIFT: TAPER LENGTHS SHALL BE IN ACCORDANCE WITH MOST RECENT VERSION OF MUTCD.

REVISED 04-01-20

CITY OF CARMEL STANDARDS

AUXILIARY LANES AND MAJOR ROAD IMPROVEMENTS

STANDARD DRAWING 10-35

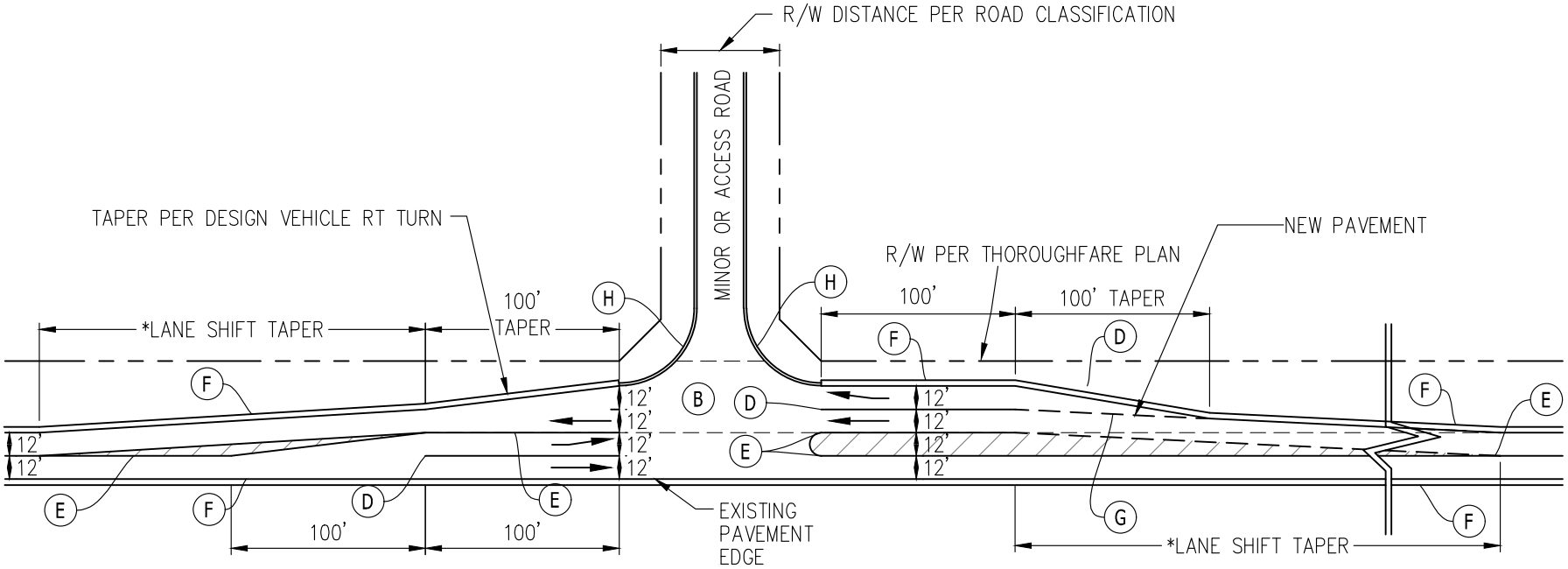

LEGEND

- (B) PAVEMENT SECTION PER ROAD CLASSIFICATION BACK TO RIGHT OF WAY.
- (D) 4" THERMOPLASTIC SOLID WHITE
- (E) 4" THERMOPLASTIC DOUBLE YELLOW FOR ENTIRE RESURFACING AREA
- (F) 6", COMPACTED AGGREGATE #73, ON COMPACTED SUBGRADE
- (G) 4" THERMOPLASTIC, DOTTED, WHITE, 2' STRIPE – 2' GAP
- (H) 40' MINIMUM RADIUS SHALL BE PROVIDED REGARDLESS OF MAJOR/MINOR ROAD CLASSIFICATION.

NOTES:

1. CONSTRUCTION PLANS SHALL INCLUDE CENTERLINE PROFILE OF EXISTING ROAD BEING INTERSECTED BY THE ENTRANCE. THE PROFILE SHALL EXTEND A MINIMUM OF 500' EACH DIRECTION FROM ENTRANCE CENTERLINE. LOCATION OF MINOR ROAD SHALL BE SUCH THAT SSD ON MAJOR ROAD IS PROVIDED.
2. THE CITY ENGINEER, AT ITS DISCRETION, MAY REQUIRE THE CONNECTION OF AUXILIARY LANES BETWEEN DEVELOPMENTS, EVEN IF WORK EXCEEDS THAT REQUIRED ON THIS DETAIL
3. AUXILIARY LANES (ACCELERATION TAPER, DECLARATION TAPER, DECLARATION LANE AND PASSING BLISTER) ARE REQUIRED AT ALL SUBDIVISION ENTRANCES WHERE R/W EXISTS PURSUANT TO CITY OF CARMEL ORDINANCES.
4. MILL THE FULL WIDTH OF THE EXISTING PAVEMENT 1.5" AND RESURFACE WITH 1.5" HMA SURFACE, 9.5mm. WORK SHALL EXTEND ACROSS ENTIRE FRONTAGE OF PROPERTY OR TO LIMITS OF AUXILIARY LANES, WHICHEVER IS GREATER.
5. IF THESE DIMENSIONS CONFLICT WITH THE DIMENSIONS PRESENTED IN CITY OF CARMEL ORDINANCES, THE REQUIREMENTS RESULTING IN LARGER DIMENSIONS SHALL APPLY.
6. WHEN PRESENT, GRAVEL SHOULDERS (F) SHALL BE 3' WIDE.

* LANE SHIFT: TAPER LENGTHS SHALL BE IN ACCORDANCE WITH MOST RECENT VERSION OF MUTCD.

REVISED 04-01-20

CITY OF CARMEL STANDARDS

AUXILIARY LANES FOR LEFT TURN BAY

STANDARD DRAWING 10–36

RAILING NOTES

1) HANDRAIL MATERIALS AND WORK SPECIFICATIONS SHALL BE IN ACCORDANCE WITH THE MOST CURRENT VERSION OF INDIANA DEPARTMENT OF TRANSPORTATION STANDARD SPECIFICATIONS AND SUPPLEMENTAL SPECIFICATIONS UNLESS OTHERWISE NOTED.

2) ALL PIPE MATERIAL SHALL BE SCHEDULE 40, ASTM A53, GR. B.

3) HANDRAILS SHALL BE GALVANIZED STEEL WITH PRIMER AND BLACK POWDER COATING MATERIALS PER TECHNICAL SPECIFICATIONS.

4) FOOTING AND POST EMBEDMENT TO BE DESIGNED BY THE DESIGNER. THE USE OF THE BASE PLATE/DROP-IN ANCHOR OPTION IS ONLY PERMITTED WHEN EMBEDDING THE POST IS NOT FEASIBLE. THE USE OF THE BASE PLATE/DROP-IN ANCHOR OPTION MAY BE APPROVED BY THE ENGINEER.

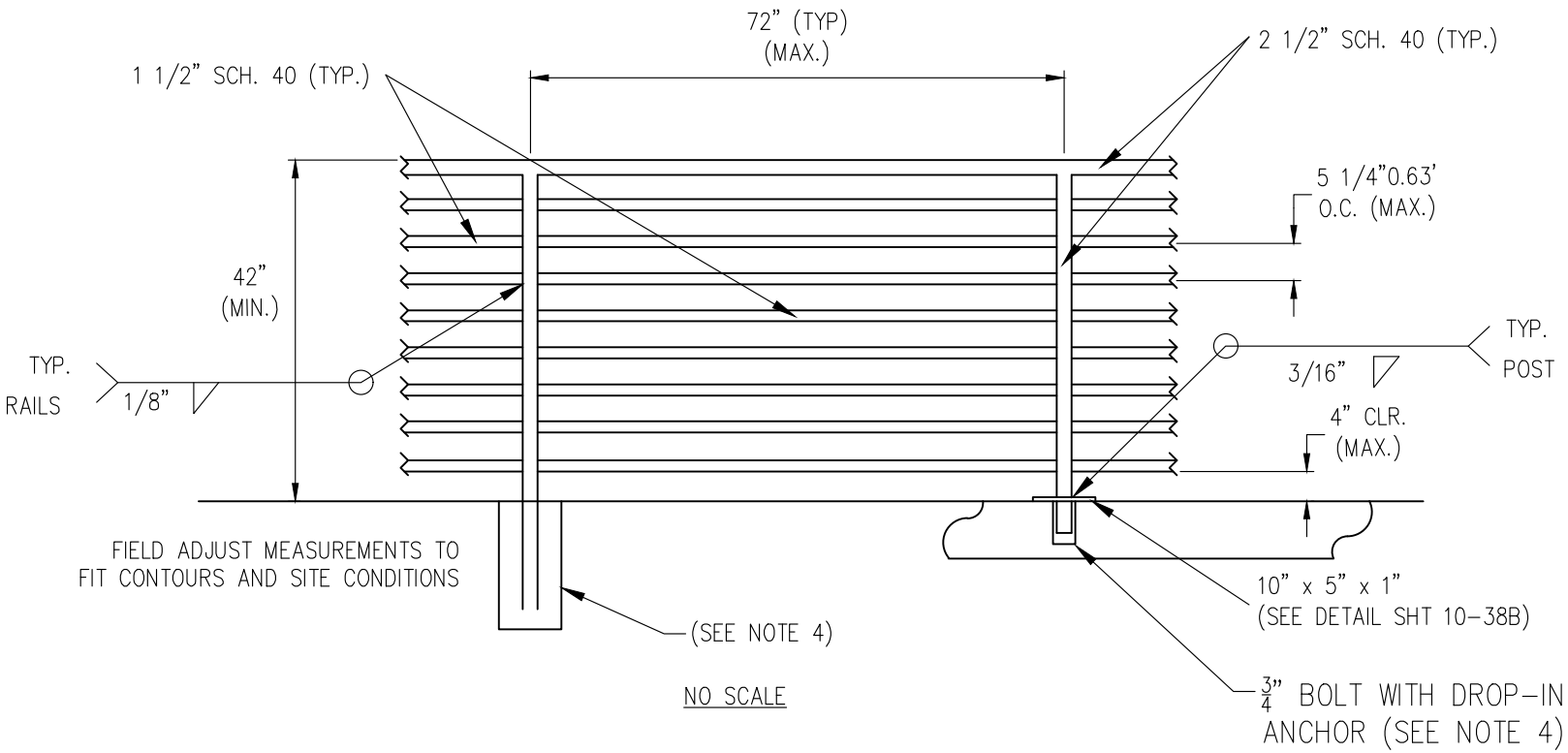

NO SCALE

CITY OF CARMEL STANDARDS

HANDRAIL

STANDARD DRAWING 10-37A

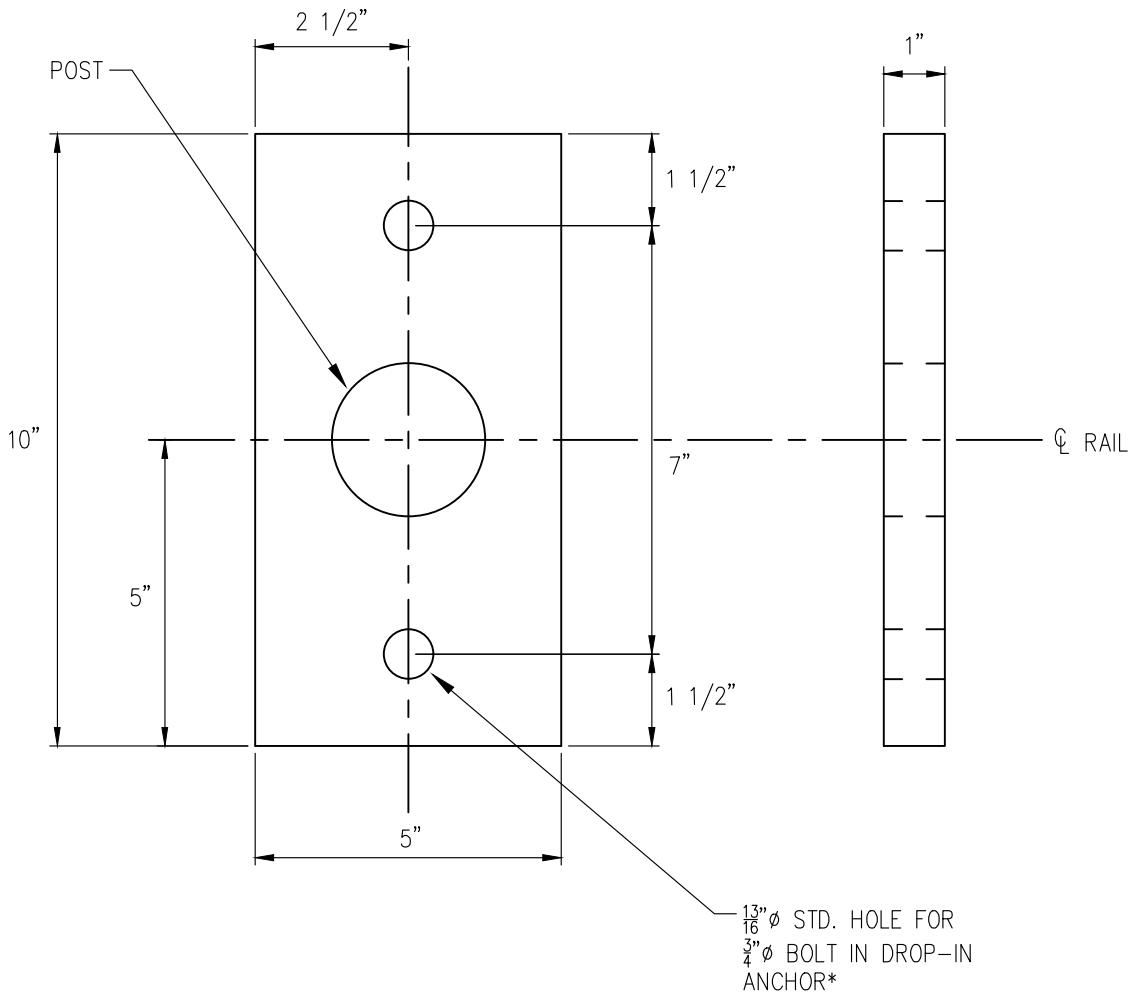

NO SCALE

* DROP-IN ANCHOR SHALL HAVE A MINIMUM ALLOWABLE TENSILE CAPACITY OF 3,000 LBS.

CITY OF CARMEL STANDARDS

HANDRAIL BASE PLATE DETAIL

STANDARD DRAWING 10-37B

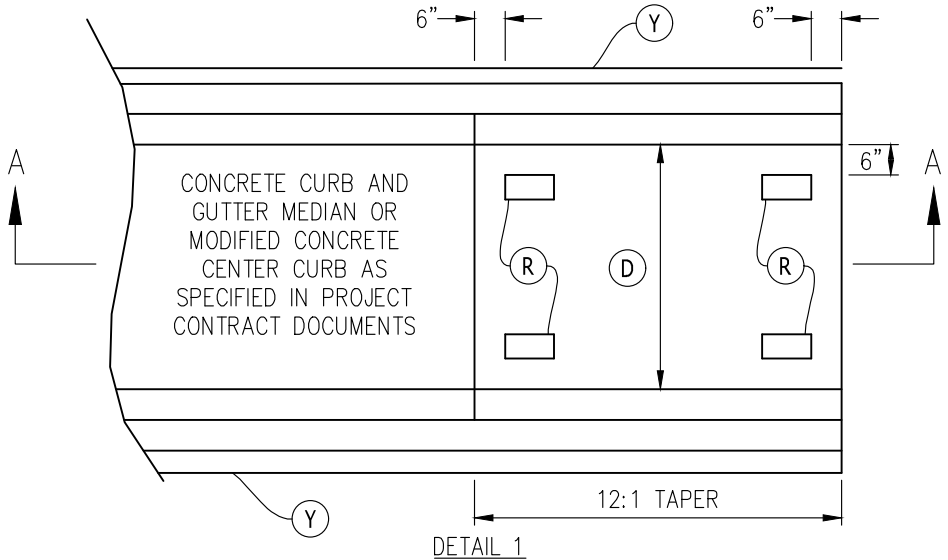

DETAIL 1

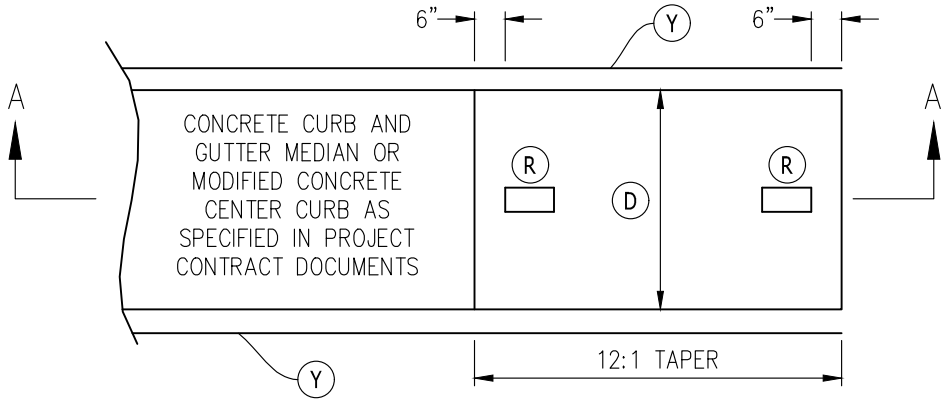

DETAIL 2

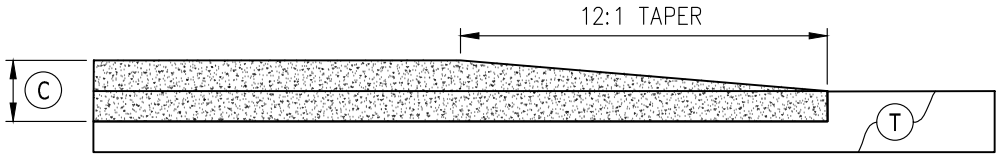

SECTION A–A

NOTES:

(D) WIDTH GREATER THAN 3' REQUIRES 4 RPMS PER DETAIL 1 OR
3' WIDTH OR LESS REQUIRES 2 RPMS PER DETAIL 2 CENTERED ON WIDTH OF MEDIAN

(R) RPM (YELLOW)

(Y) LINE, THERMOPLASTIC, YELLOW, 4IN.

LEGEND

(C) CURB DEPTH AS SPECIFIED

(T) TYPICAL PAVEMENT SECTION

STANDARD DRAWING 10–38	CITY OF CARMEL STANDARDS
	CONCRETE CURB END TREATMENT DELINEATION

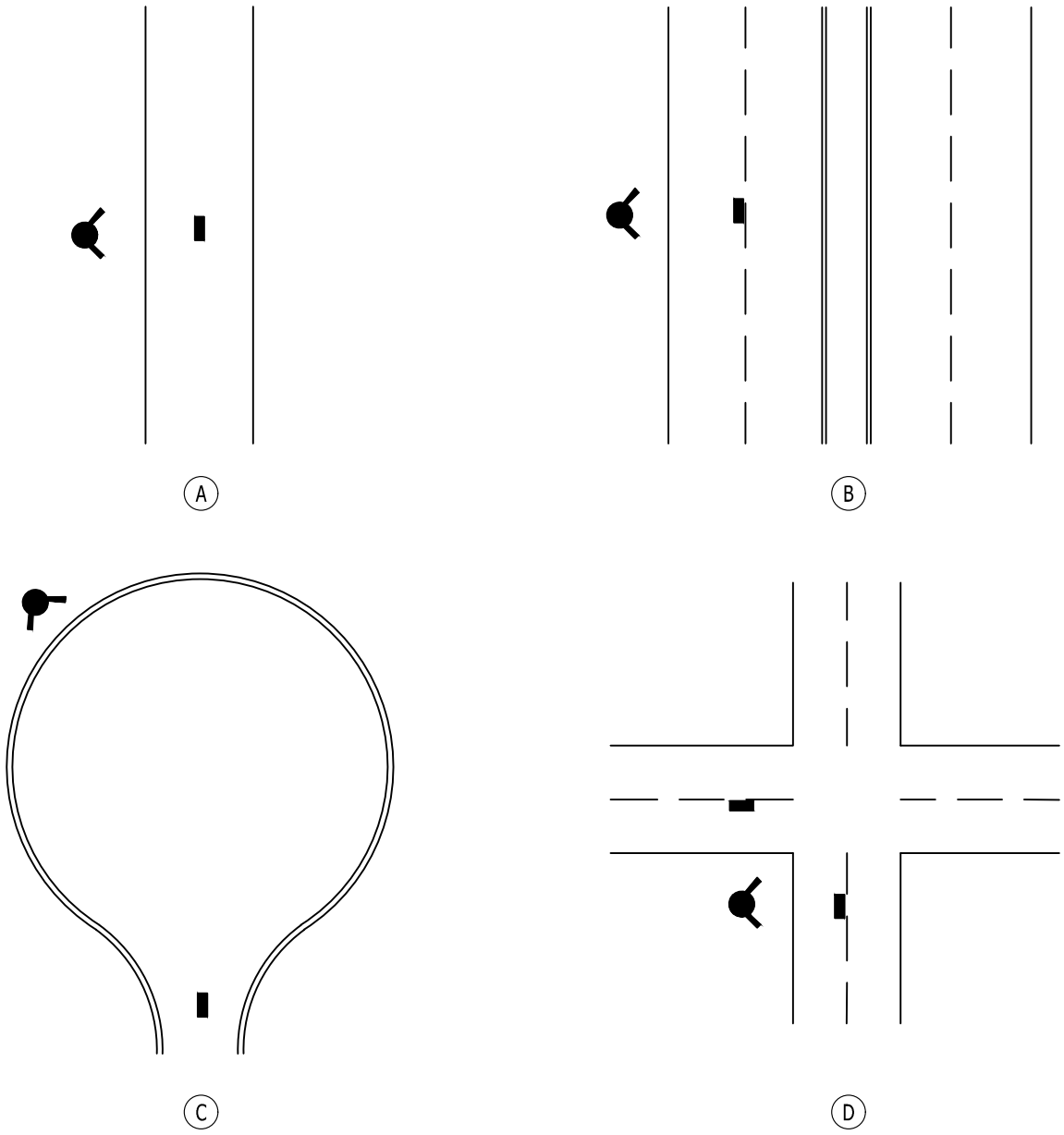

LEGEND

RPM TYPE 2 (BLUE) PER INDOT STANDARD DWG E 808-MKRM-11

FIRE HYDRANT

NOTES:

(A) FOR PAVED UNDIVIDED ROAD SURFACES PLACEMENT SHALL BE IN THE CENTER OF THE STREET.

(B) FOR DIVIDED MULTI-LANE ROAD SURFACES PLACEMENT SHALL BE IN CENTER DIVIDER LANE CLOSEST TO HYDRANT LOCATION.

(C) FOR CUL-DE-SAC APPLICATIONS PLACEMENT SHALL BE AT THE BEGINNING OF THE CUL-DE-SAC CIRCLE IN THE CENTER OF THE STREET.

(D) FOR INTERSECTION APPLICATIONS PLACEMENT SHALL BE CENTER SURFACE DIVIDER CLOSEST TO HYDRANT LOCATION IN EITHER TRAVEL DIRECTION.

STANDARD DRAWING 10-39	CITY OF CARMEL STANDARDS
	FIRE HYDRANT MARKER PLACEMENT

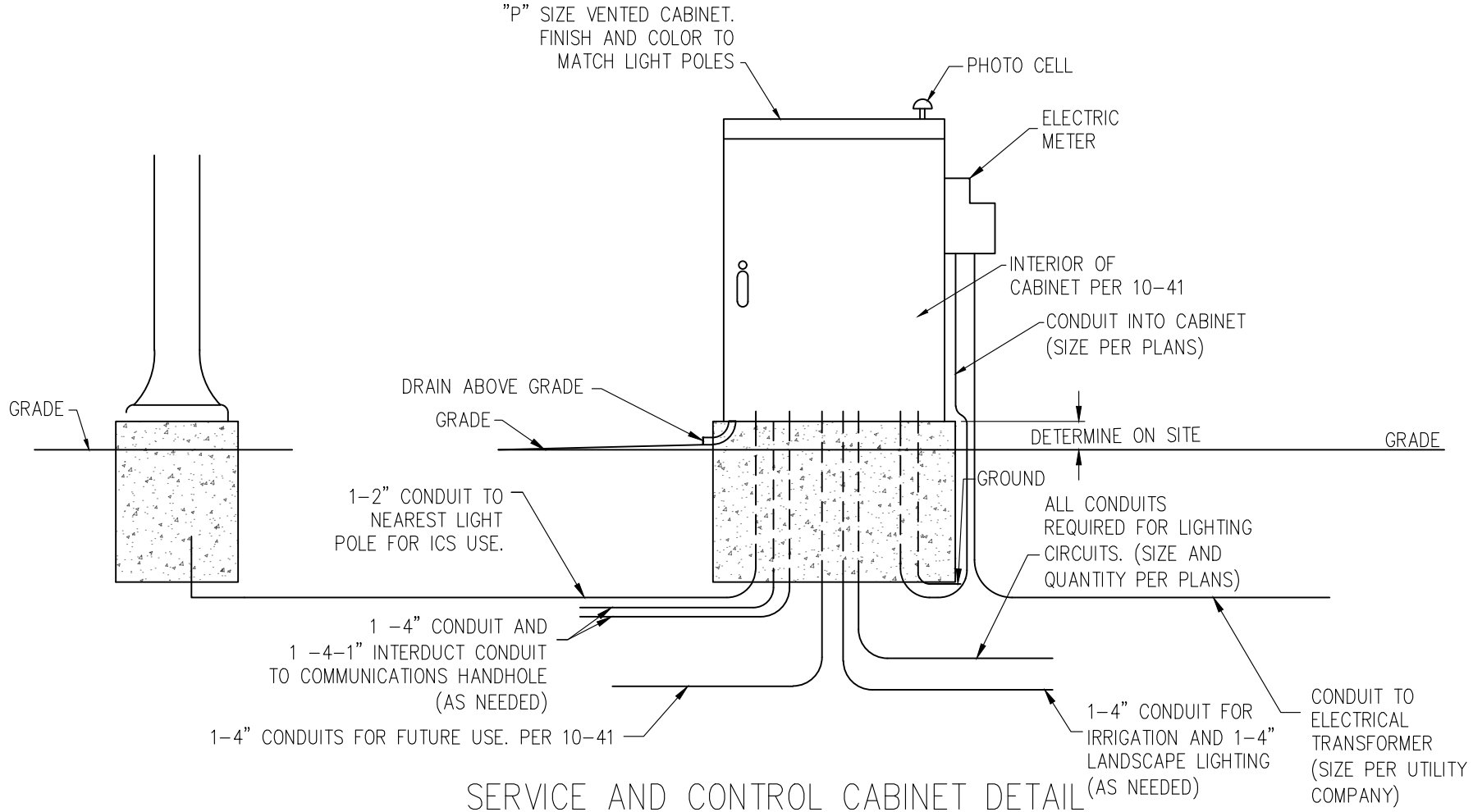

SERVICE AND CONTROL CABINET DETAIL

NO SCALE

NOTES:

1. FOR RETROFIT WHERE POLE FOUNDATION IS EXISTING, NOTCH CONCRETE BASE AND INSTALL CONDUIT, PATCH WITH GROUT.
2. ALL BENDS ARE TO BE SWEEPING ELBOWS.
3. ALL CONDUIT SHALL HAVE LOCATE WIRE.
4. LABEL CONDUIT IN CABINET FOR FUTURE WEATHER STATION.
5. ALL CONDUITS FOR FUTURE USE SHALL BE TERMINATED 1' OUTSIDE OF FOUNDATION AND CAPPED.

REVISED 04-01-20

CITY OF CARMEL STANDARDS

SERVICE AND CONTROL CABINET DETAIL

STANDARD DRAWING 10-40

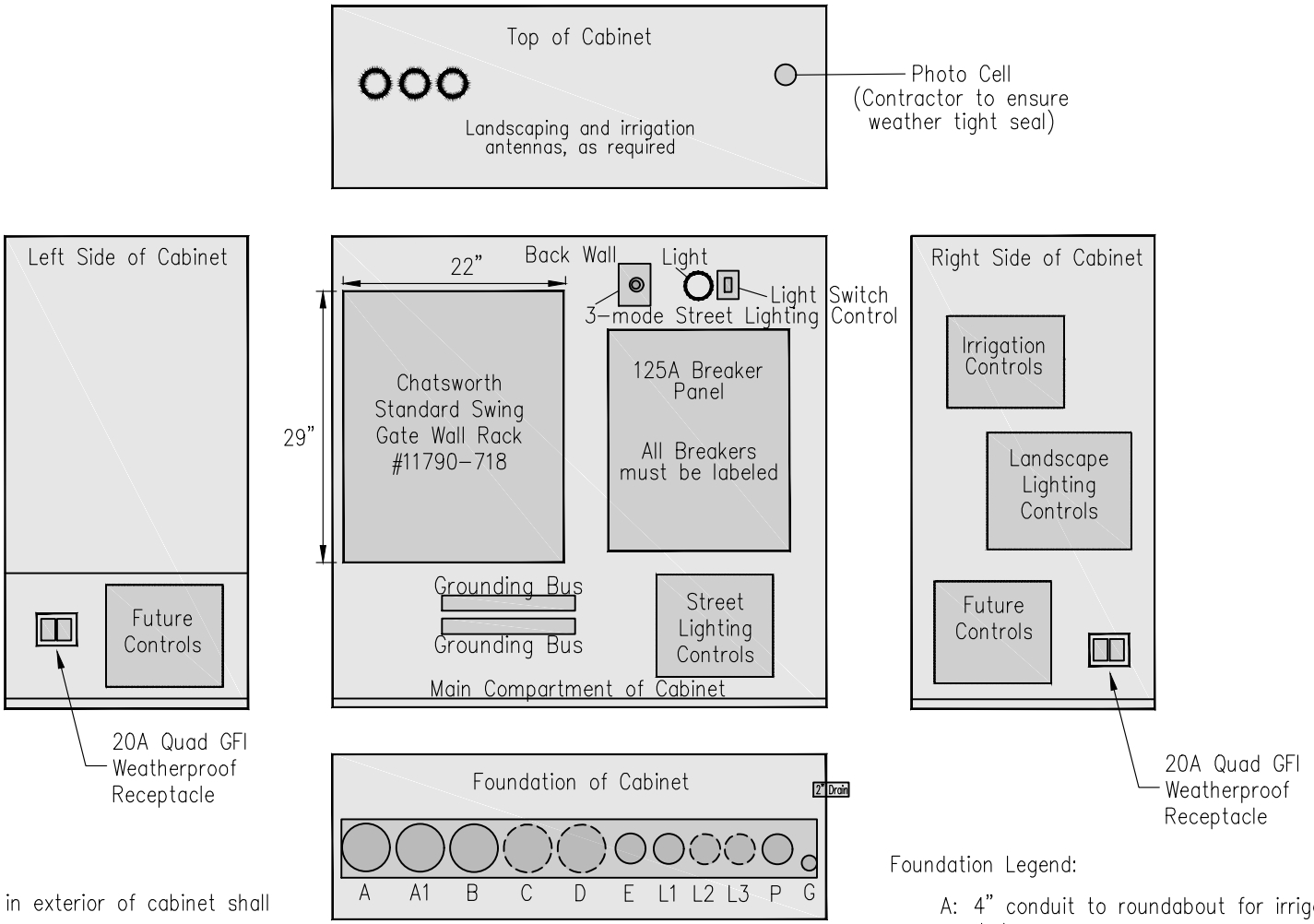

NOTES:

1. All holes placed in exterior of cabinet shall be weathertight.
2. Place backing plate for equiptment mounting on left wall from Swing Gate Wall Rack to floor, on back wall from ceiling to floor, and on right wall from ceiling to floor.
3. Coordinate with Carmel ICS and Street Dept for approval of cabinet interior layout prior to constructing.
4. All breakers must be labeled with unused breakers labeled "not used".

Foundation Legend:

A: 4" conduit to roundabout for irrigation, as needed.
A1: 4" conduit to roundabout for landscape lighting, as needed.
B: 4" conduit, spare to be capped 1' outside of foundation.
C: 4" conduit to ICS handhole, as needed.
D: 4" conduit with 3-1.25" innerduct to ICS handhole, as needed.
E: 2" conduit to nearest light pole for ICS use.
L: conduit for lighting, size and number as required.
P: conduit to electric meter, size as required.
G: conduit for ground, size as required.

REVISED 04-01-20

CITY OF CARMEL STANDARDS

SERVICE AND CONTROL CABINET INTERIOR DETAIL

STANDARD DRAWING 10-41

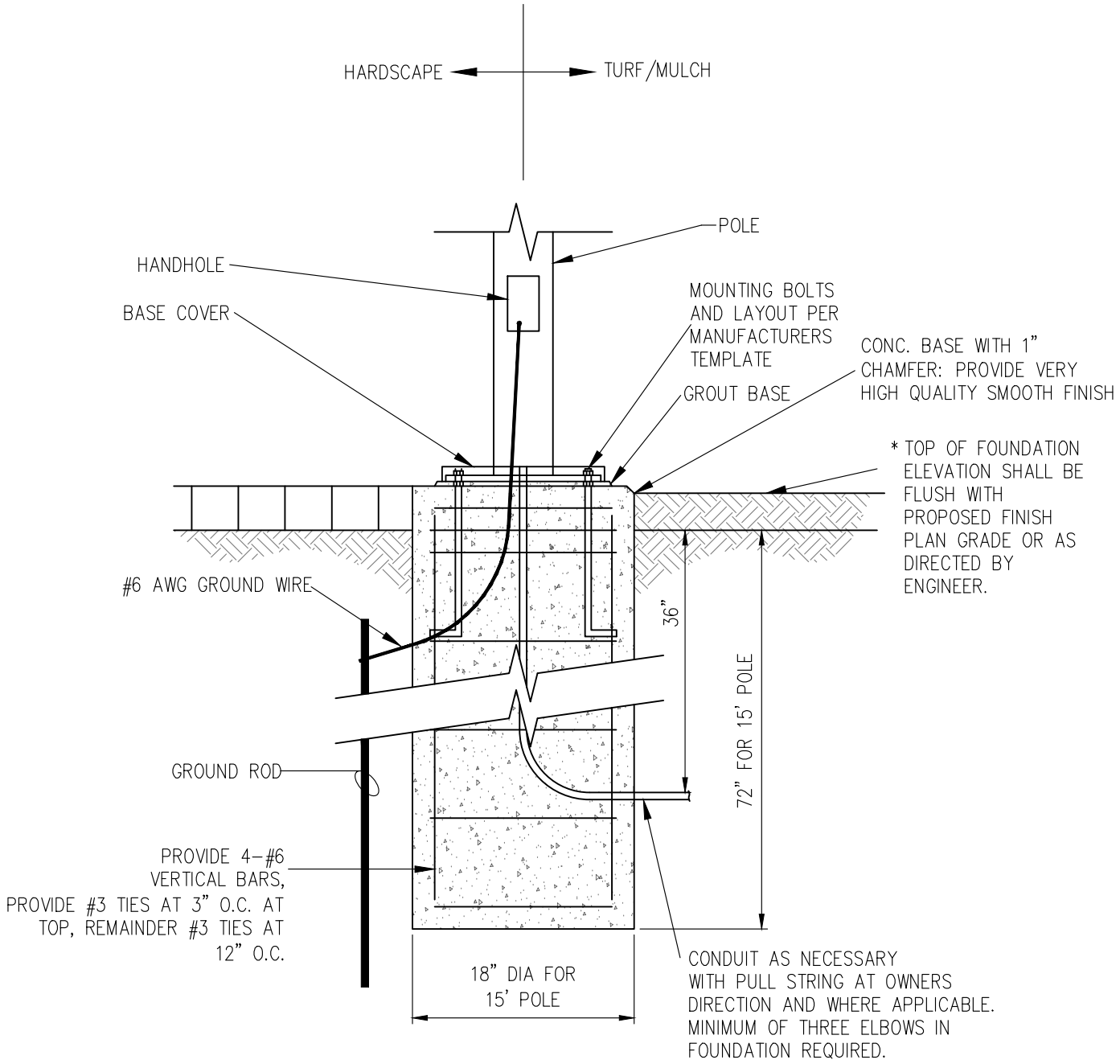

15' POLE BASE DETAIL

NO SCALE

REVISED 04-01-20

STANDARD DRAWING 10-42A	CITY OF CARMEL STANDARDS
	15' LIGHT POLE FOUNDATION DETAIL

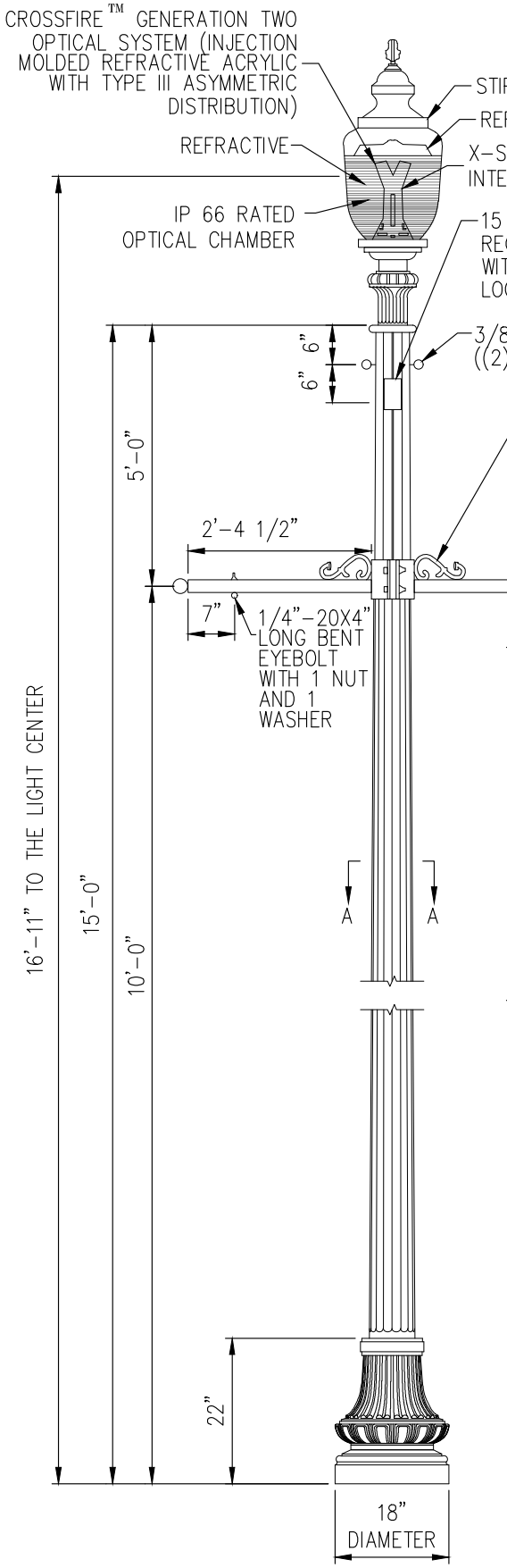

LUMINAIRE SPECIFICATIONS

STYLE:	WASHINGTON WITH THE X-SERIES LED MODULE, 118
HEIGHT:	REFRACTIVE GLOBE AND FINIAL
WIDTH:	44 3/8"
MATERIAL:	15 7/8"
	CAST ALUMINUM ALLOY ANSI 356, PER A.S.T.M. B26-95
FINISH:	POWDER COAT - RIVER TEXTURE GLOSS BLACK
LAMPING:	70 WATT LED
VOLTAGE:	ELECTRONIC WIRED AT 120-277 VOLTS
COLOR TEMP.:	4000K (MEDIUM WHITE)
OPTICAL SYSTEM:	TYPE III CROSSFIRE REFRACTIVE OPTICS (ASYMMETRIC DISTRIBUTION)
SURGE:	10 kV
CATALOG NO.	ALMWSH-LE070/EVX/L18-40-CR3-PF83-FPP-CU

LAMP POST SPECIFICATIONS

STYLE:	WASHINGTON STEEL
HEIGHT:	15'-0"
PHOTOMETRIC CENTER:	16'-11"
BASE:	18" DIAMETER
MATERIAL:	
SHAFT:	11 GAUGE MIN. 12 FLAT FLUTE, STEEL MONOTUBE CONSTRUCTION
BASE:	2 PIECE, (WRAP AROUND) HEAVY WALL CAST IRON PER A.S.T.M. A 48-83 CLASS 30
FINISH:	PRIME PAINT THEN FINISH PAINT SHERWIN WILLIAMS ACROLON CLASSIC BLACK
ACCESS DOOR:	LOCATED IN BASE TO COINCIDE WITH HAND HOLE IN STEEL SHAFT SECURED WITH TAMPER PROOF HEX SOCKET SECURITY MACHINE SCREWS
GROUND STUD PROVISIONS:	1/4"-20 SQUARE NUT WELDED TO INSIDE WALL OF POLE OPPOSITE HANDHOLE FOR GROUND STUD (STUD PROVIDED BY OTHERS)
ANCHOR BOLTS:	(4) 3/4"x24"+3" HOOK (FULLY GALVANIZED WITH 2 GALVANIZED NUT AND 2 GALVANIZED WASHER PER BOLT) - SEE QUANTITY WHEN REQ'D
BOLT PROJECTION:	5" REQUIRED
TENON:	3 1/2" DIA. x 3" HIGH (ABOVE DONUT) TO ACCEPT LUMINARE
CATALOG NO.	
ARM:	ABNUBA-MI-2S-1.50-28.50-6.25-FFR-XX-CB
ANCHOR BOLTS:	323/2NW
SHAFT:	SSH2F-G11-07.50-15.00-TN3.50/3.00-GFWN-C8
BASE:	ISBWSH-18-C8

REVISED 04-01-20

STANDARD DRAWING 10-42B	CITY OF CARMEL STANDARDS
	15' LIGHT POLE DETAIL

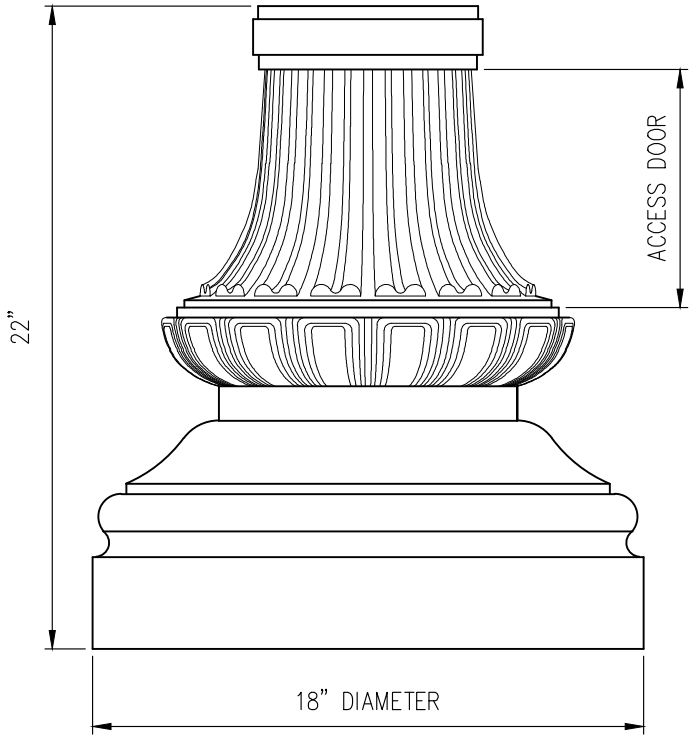

CAST BASE SPECIFICATIONS

STYLE:	WASHINGTON
HEIGHT:	22"
BASE:	18" DIAMETER ☒ WRAP BASE
MATERIAL:	☒ CAST IRON PER A.S.T.M. A 48-83 CLASS 30 - CLASSIC BLACK
FINISH:	PRIME PAINT THEN FINISH SHERWIN WILLIAMS ACROLON - ACROLON CLASSIC BLACK
ACCESS DOOR:	LOCATED IN THE BASE TO COINCIDE WITH HANDHOLE IN STEEL SHAFT, SECURED WITH TAMPER PROOF HEX SOCKET SECURITY MACHINE SCREWS

15' POLE-DECO WRAP BASE

NO SCALE

REVISED 04-01-20

STANDARD DRAWING 10-42C	CITY OF CARMEL STANDARDS
	15' LIGHT POLE DECO WRAP BASE

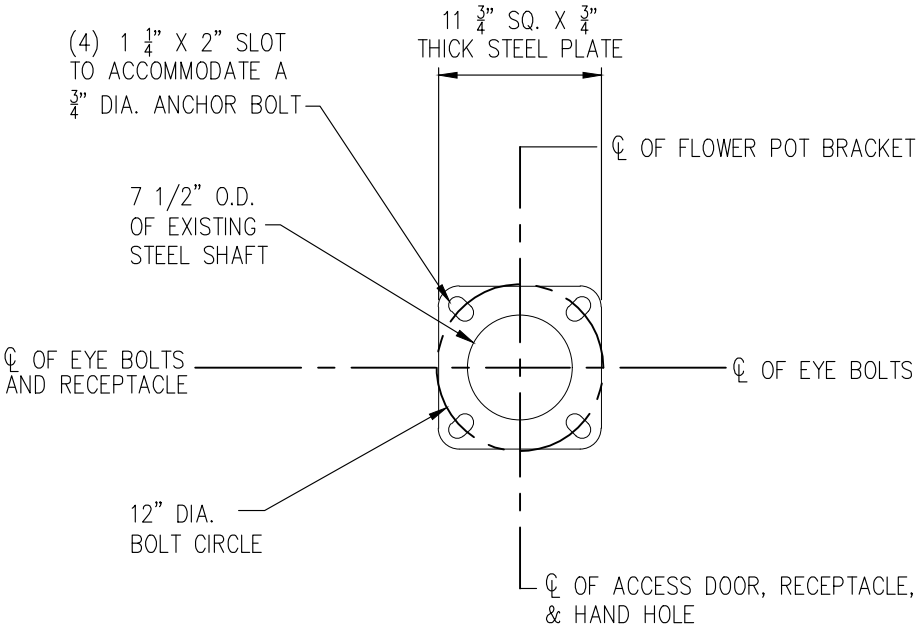

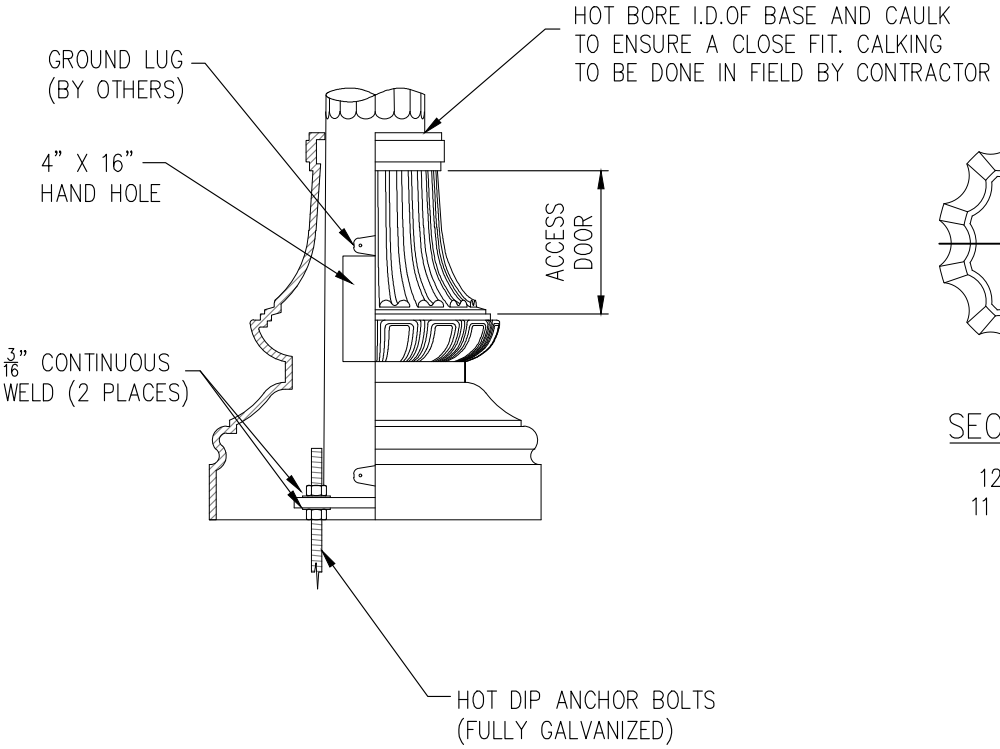

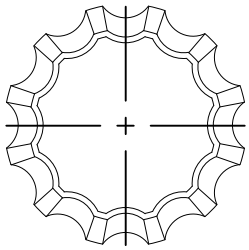

SECTION A–A

12 FLAT FLUTE
11 GAUGE STEEL
N.T.S.

REVISED 4-5-17

STANDARD DRAWING 10–42D	CITY OF CARMEL STANDARDS
	MISCELLANEOUS 15' LIGHT POLE DETAILS

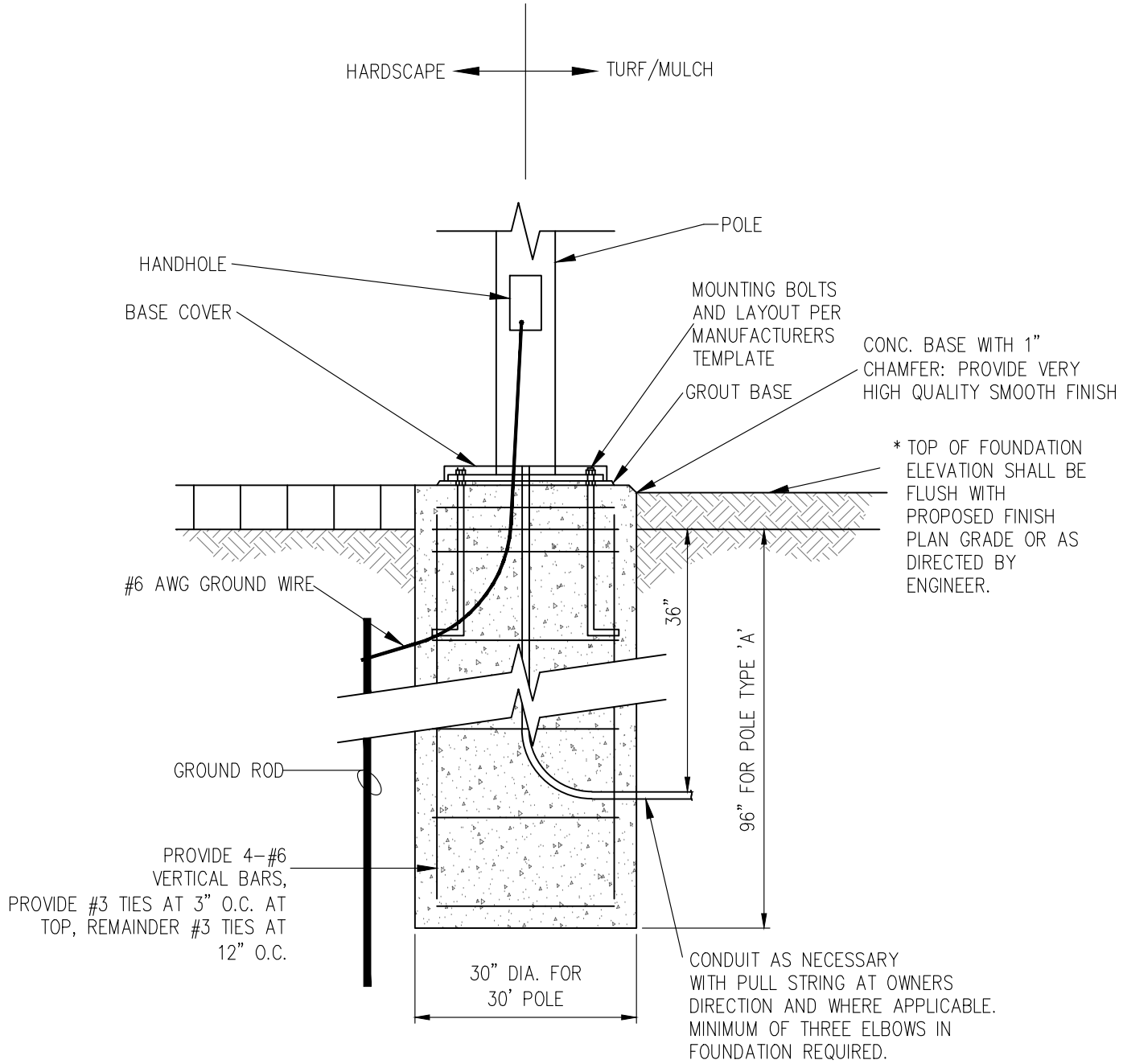

30' POLE BASE DETAIL

NO SCALE

REVISED 04-01-20

STANDARD DRAWING 10-43A	CITY OF CARMEL STANDARDS
	30' LIGHT POLE FOUNDATION DETAIL

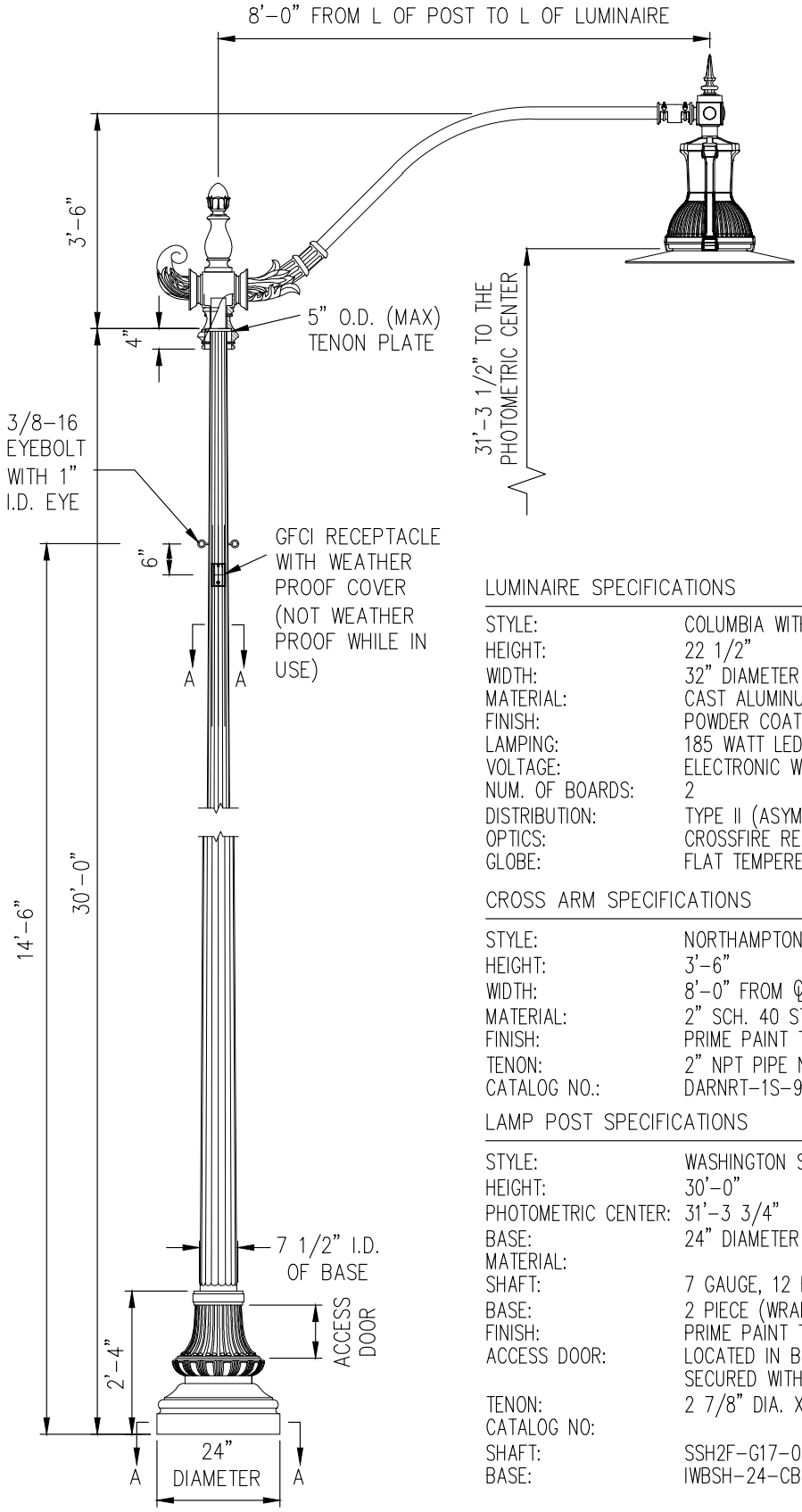

LUMINAIRE SPECIFICATIONS

STYLE:	COLUMBIA WITH EDGEWATER FINIAL
HEIGHT:	22 1/2"
WIDTH:	32" DIAMETER
MATERIAL:	CAST ALUMINUM ALLOY ANSI 356, PER A.S.T.M. B26-95
FINISH:	POWDER COAT - RIVER TEXTURE GLOSS BLACK
LAMPING:	185 WATT LED
VOLTAGE:	ELECTRONIC WIRED AT 120-277 VOLTS
NUM. OF BOARDS:	2
DISTRIBUTION:	TYPE II (ASYMMETRIC DISTRIBUTION)
OPTICS:	CROSSFIRE REFRACTIVE
GLOBE:	FLAT TEMPERED GLASS

CROSS ARM SPECIFICATIONS

STYLE:	NORTHAMPTON
HEIGHT:	3'-6"
WIDTH:	8'-0" FROM ℄ OF POST TO ℄ OF LUMINAIRE
MATERIAL:	2" SCH. 40 STEEL PIPE WITH CAST DUCTILE IRON ORNAMENTATION
FINISH:	PRIME PAINT THEN FINISH SHERWIN WILLIAMS ACROLON CLASSIC BLACK
TENON:	2" NPT PIPE NIPPLE
CATALOG NO.:	DARNRT-1S-96-42-CB

LAMP POST SPECIFICATIONS

STYLE:	WASHINGTON STEEL
HEIGHT:	30'-0"
PHOTOMETRIC CENTER:	31'-3 3/4"
BASE:	24" DIAMETER WRAP BASE
MATERIAL:	
SHAFT:	7 GAUGE, 12 FLAT FLUTE, STEEL MONOTUBE CONSTRUCTION
BASE:	2 PIECE (WRAP AROUND) CAST IRON PER A.S.T.M. A48-83 CLASS 30
FINISH:	PRIME PAINT THEN FINISH SHERWIN WILLIAMS ACROLON CLASSIC BLACK
ACCESS DOOR:	LOCATED IN BASE, TO COINCIDE WITH HAND HOLE IN STEEL SHAFT, SECURED WITH TAMPER PROOF HEX SOCKET SECURITY MACHINE SCREWS
TENON:	2 7/8" DIA. X 6" HIGH (TO ACCEPT CROSS ARM)
CATALOG NO:	
SHAFT:	SSH2F-G17-07.60-30.00-TN2.88/6.00-GFWN-(2)EB-CB
BASE:	IWBSH-24-CB

REVISED 04-01-20

STANDARD DRAWING 10-43B	CITY OF CARMEL STANDARDS
	30' LIGHT POLE DETAIL

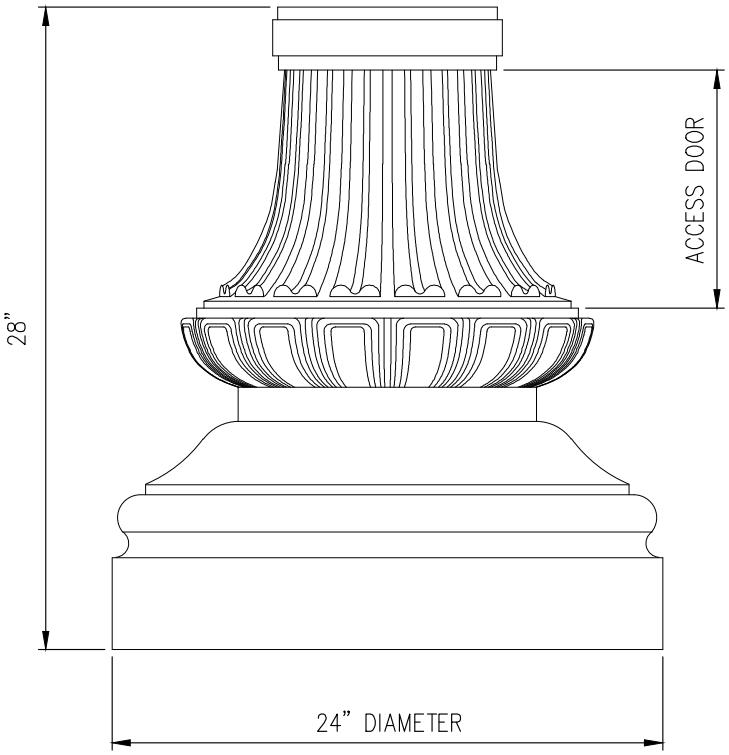

CAST BASE SPECIFICATIONS

Style:	Washington
HEIGHT:	28"
BASE:	24" DIAMETER ☒ WRAP BASE
MATERIAL:	☒ CAST IRON PER A.S.T.M. A 48-83 CLASS 30 - CLASSIC BLACK
FINISH:	PRIME PAINT THEN FINISH SHERWIN WILLIAMS ACROLON - ACROLON CLASSIC BLACK
ACCESS DOOR:	LOCATED IN BASE TO COINCIDE WITH HANDHOLE IN STEEL SHAFT, SECURED WITH TAMPER PROOF HEX SOCKET SECURITY MACHINE SCREWS

30' POLE-DECO WRAP BASE

NO SCALE

REVISED 04-01-20

STANDARD DRAWING 10-43C	CITY OF CARMEL STANDARDS
	30' LIGHT POLE DECO WRAP BASE

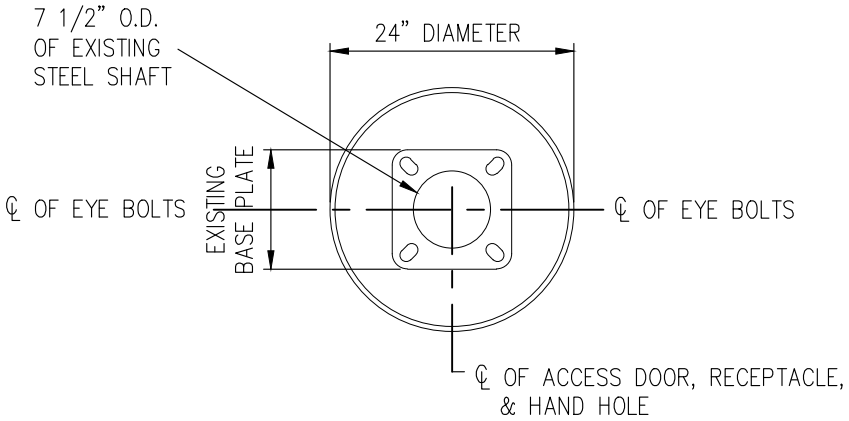

SECTION A–A
N.T.S.

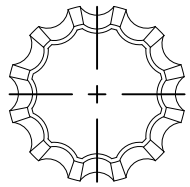

EXISTING 7 GAUGE
STEEL SHAFT
12 FLAT FLUTE

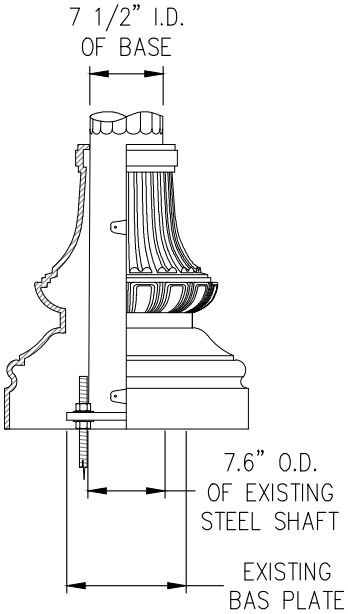

STANDARD DRAWING 10–43D	CITY OF CARMEL STANDARDS
	MISCELLANEOUS 30' LIGHT POLE DETAILS

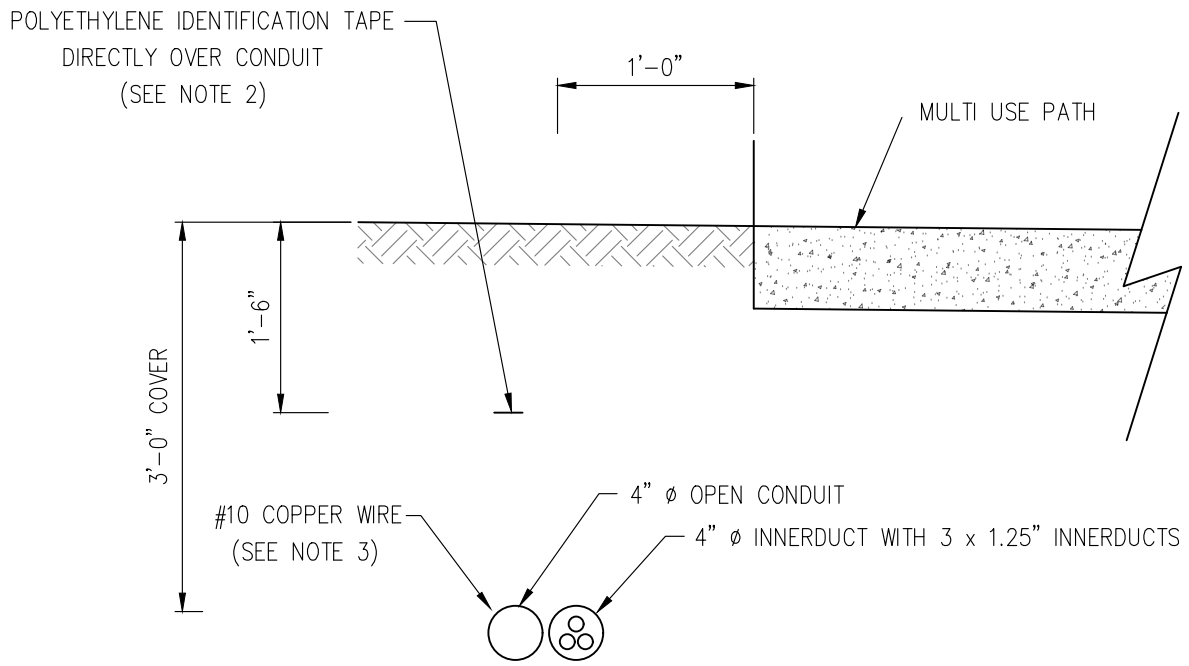

CONDUIT/INNERDUCT DETAIL

NO SCALE

NOTES:

1. 4" ø CONDUIT SHALL BE PVC SCHEDULE 40, UNLESS OTHERWISE APPROVED BY THE CITY OF CARMEL. FOR CONDUIT NOT INSTALLED IN TRENCHES, REFER TO SECTION 805 OF INDOT STANDARD SPECIFICATIONS. THE INNER DUCTS SHALL BE SPECIFICALLY DELINEATED WITH 3 CONTRASTING COLORS.
2. THE POLYETHYLENE IDENTIFICATION TAPE SHALL BE METALLIC AND HAVE A MINIMUM THICKNESS OF OF 4 MILS. THE TAPE SHALL READ "CAUTION BURIED FIBER OPTIC". TAPE SHALL BE PLACED DIRECTLY OVER PIPE AND 18" BELOW FINAL GRADE.
3. 10 GAUGE INSULATED SOLID COPPER LOCATING WIRE SHALL RUN THE LENGTH OF THE CONDUIT AND SHALL BE ATTACHED DIRECTLY TO THE OUTSIDE OF THE OPEN CONDUIT EVERY 10 FEET. THE LOCATING WIRE SHALL EXTEND INTO THE HANDHOLES WITH A MINIMUM OF 5 FEET OF COILED WIRE IN THE HANDHOLE FOR EACH DIRECTION AND SPLICED WITHIN THE HANDHOLE FOR LOCATING PURPOSES.
4. HANDHOLES SHALL BE PLACED AT LOCATIONS DESIGNATED BY THE CITY ENGINEER, BUT NO GREATER THAN 400 FEET APART
5. DEVELOPER SHALL SUBMIT SHOP DRAWINGS OF INNERDUCT AND HANDOLES FOR REVIEW AND APPROVAL.
6. NO. 8 STONE SHALL BE UTILIZED AS BACKFILL FOR ANY CONDUIT PLACED UNDER PAVEMENT CROSSINGS.
7. DESIGNER SHALL COORDINATE WITH CITY ENGINEER AND CARMEL COMMUNICATIONS TO DETERMINE ANY NECESSARY DEVIATIONS FROM THIS STANDARD.

REVISED 04-01-20

STANDARD DRAWING 10-44	CITY OF CARMEL STANDARDS
	CONDUIT/INNER DUCT DETAIL CITY OF CARMEL

NOT TO SCALE

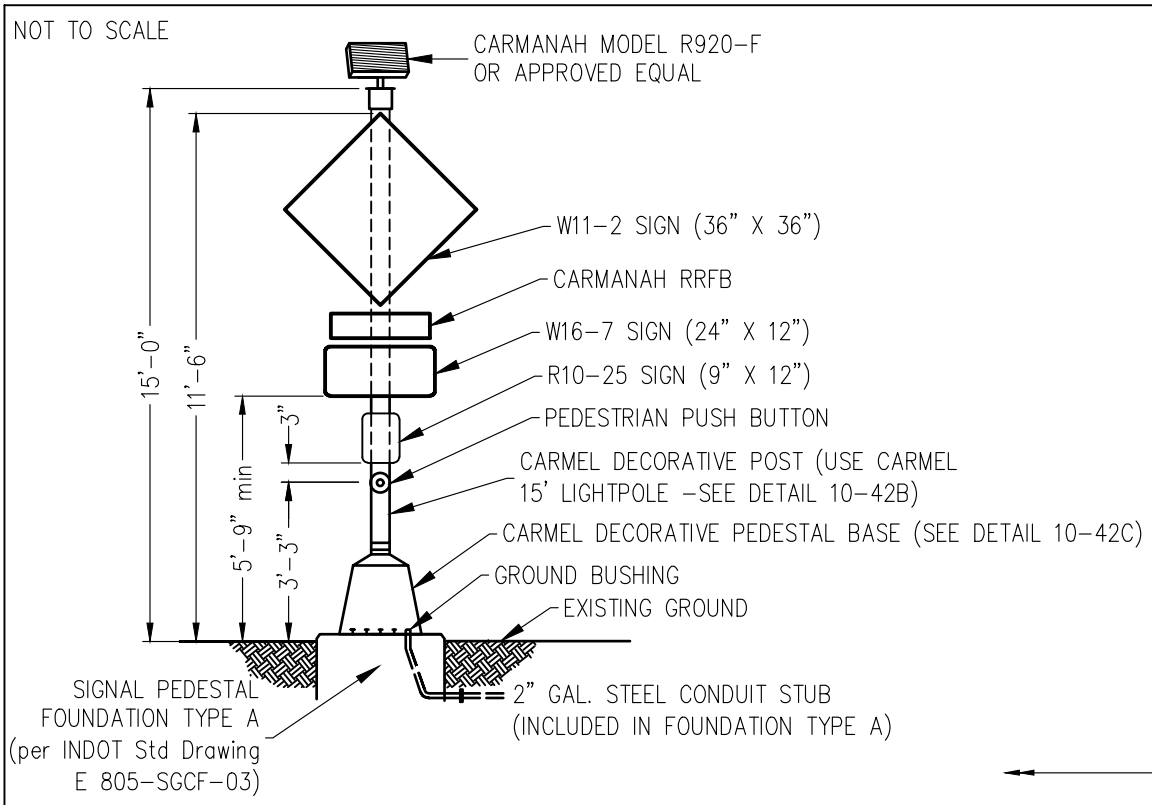

DECORATIVE SOLAR FLASHER-SINGLE FACE

Decorative Solar Flasher - Single Face shall include all fittings and materials to make a complete installation as shown on the plans.

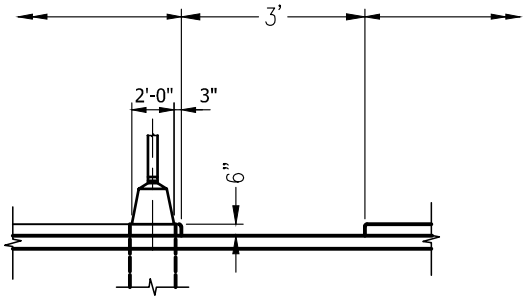

PEDESTRIAN ISLAND OPENING

NO SCALE

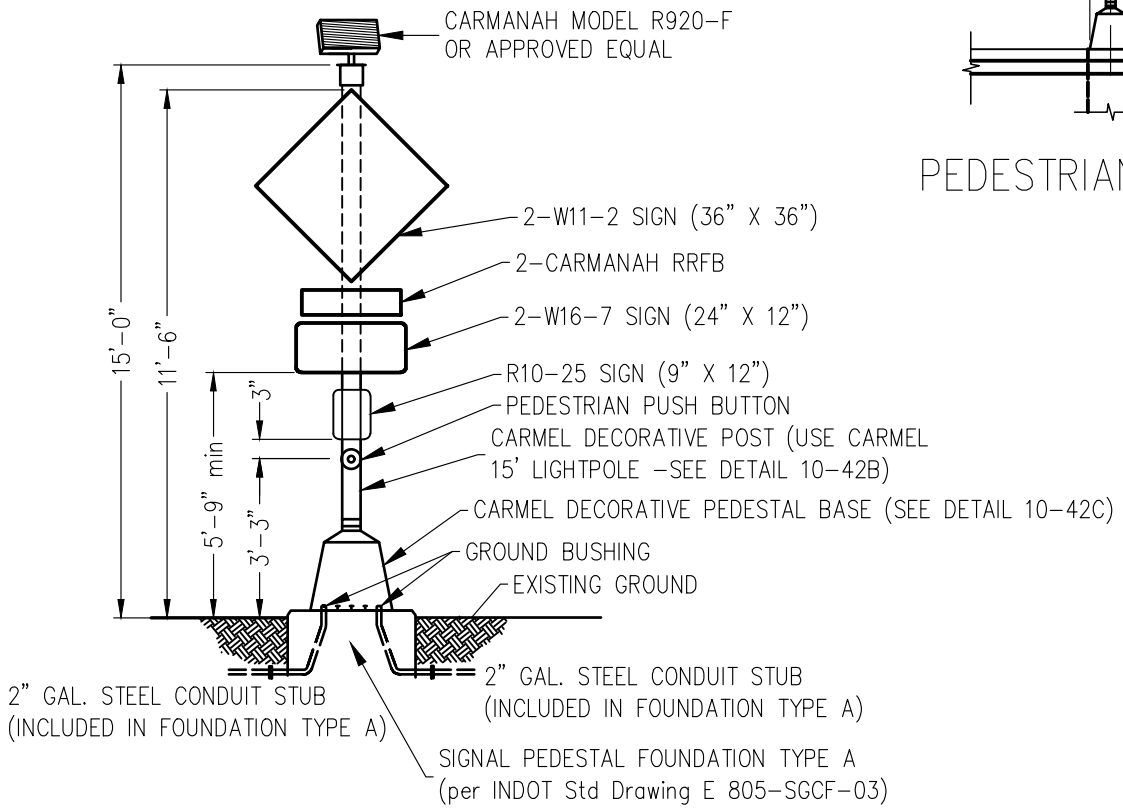

DECORATIVE SOLAR FLASHER-DOUBLE FACE

Decorative Solar Flasher - Double Face shall include all fittings and materials to make a complete installation as shown on the plans.

Note: Coordinate with City of Carmel for use of hard-wire or solar rapid flashing beacons.

STANDARD DRAWING 10-45	CITY OF CARMEL STANDARDS
	RAPID FLASHING BEACON

DECIDUOUS TREE PLANTING DETAIL

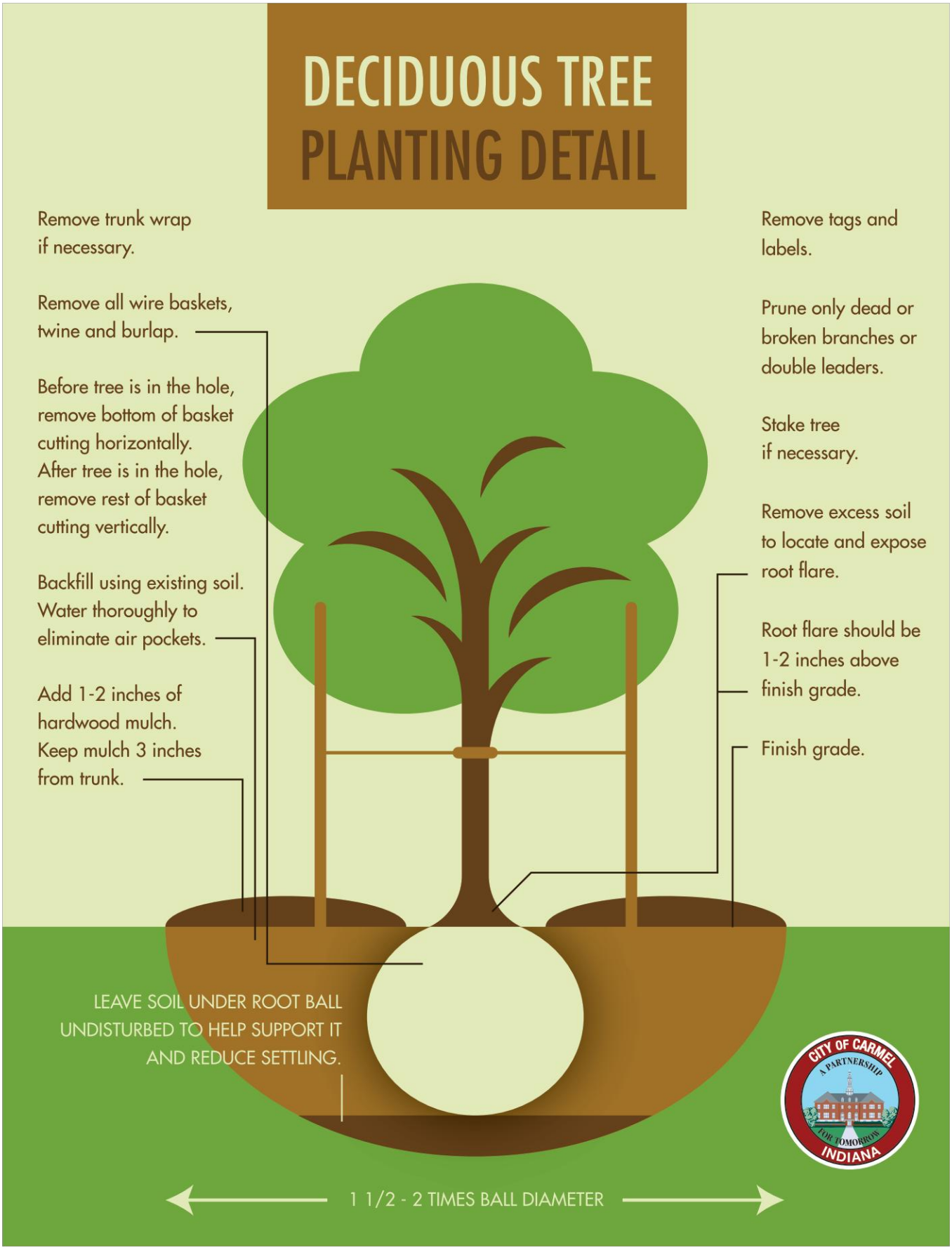

STANDARD DRAWING 10–46	CITY OF CARMEL STANDARDS
	TREE PLANTING DETAIL – DECIDUOUS TREE

CONIFEROUS TREE PLANTING DETAIL

STANDARD DRAWING 10–47	CITY OF CARMEL STANDARDS
	TREE PLANTING DETAIL – CONIFEROUS TREE

SHRUB PLANTING DETAIL

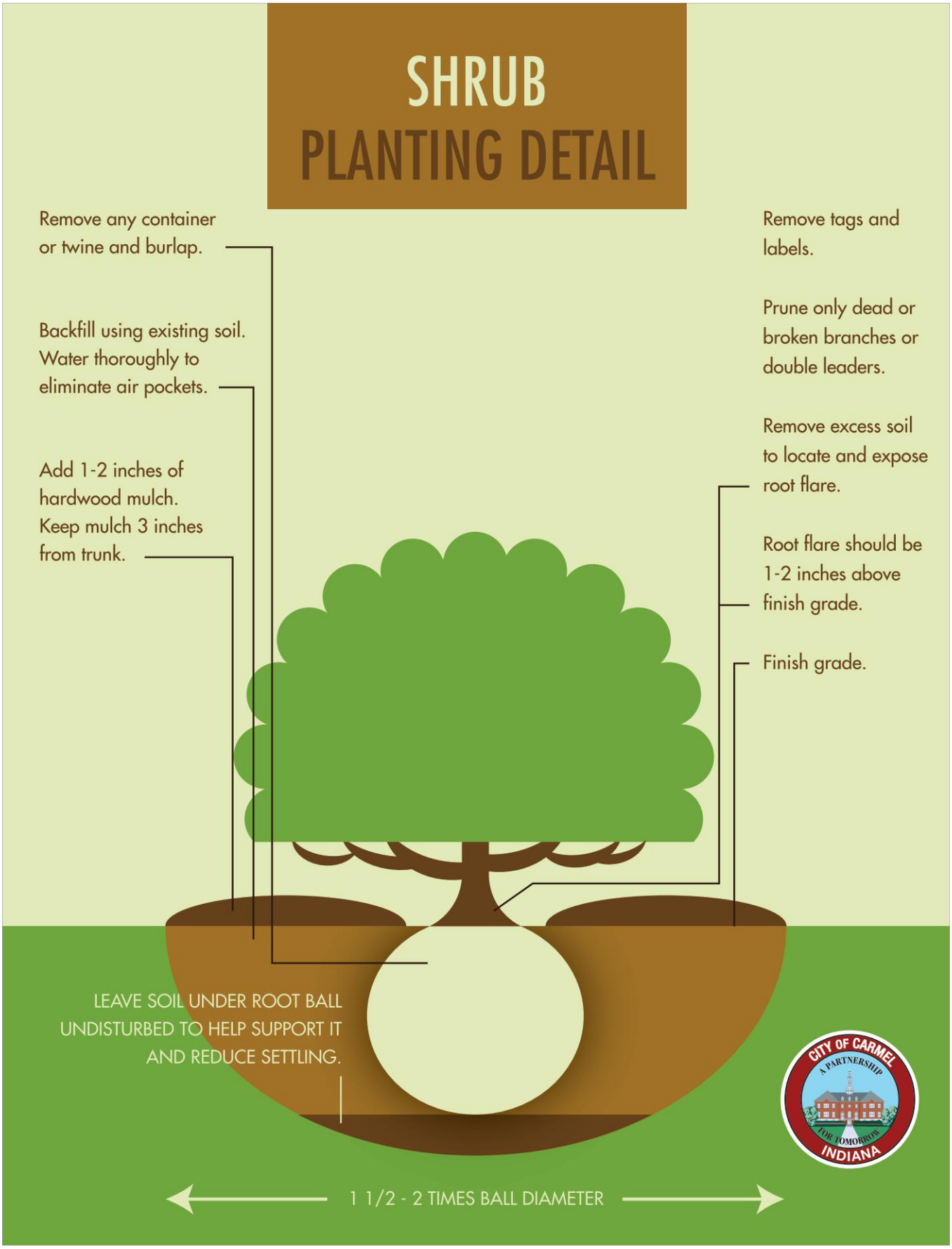

STANDARD DRAWING 10–48	CITY OF CARMEL STANDARDS
	SHRUB PLANTING DETAIL

GENERAL NOTES

1. The truck aprons shall be per City of Carmel Standard Drawing 10-25A

2. Any landscaping or objects located within the center island shall be approved by the Department of Engineering. If no landscaping is proposed in the center island, fill should be placed at a 6:1 slope in order to provide a sight obstruction mound (see truck apron detail).

3. All signage and pavement markings are subject to approval by the Department of Engineering.

4. No drainage structures shall be located within circumference of inscribed circle.

5. All other appropriate City of Carmel Standards apply.

6. All roundabout designs must be approved by the Department of Engineering.

7. The design vehicle shall be the AASHTO WB-50 for Single and Multi-Lane Roundabouts. The roundabouts should be checked using the WB-65 to ensure no adverse impacts.

8. All roundabout projects designed within the City of Carmel shall submit electronic CAD files to the City of Carmel Department of Engineering. The electronic submission shall include at a minimum:

   a. All sheet files in the current AutoCAD (.dwg) format
   b. All base files in the current AutoCAD (.dwg) format
   c. All sheet files in the .PDF format
   d. As-built drawings in the .PDF format

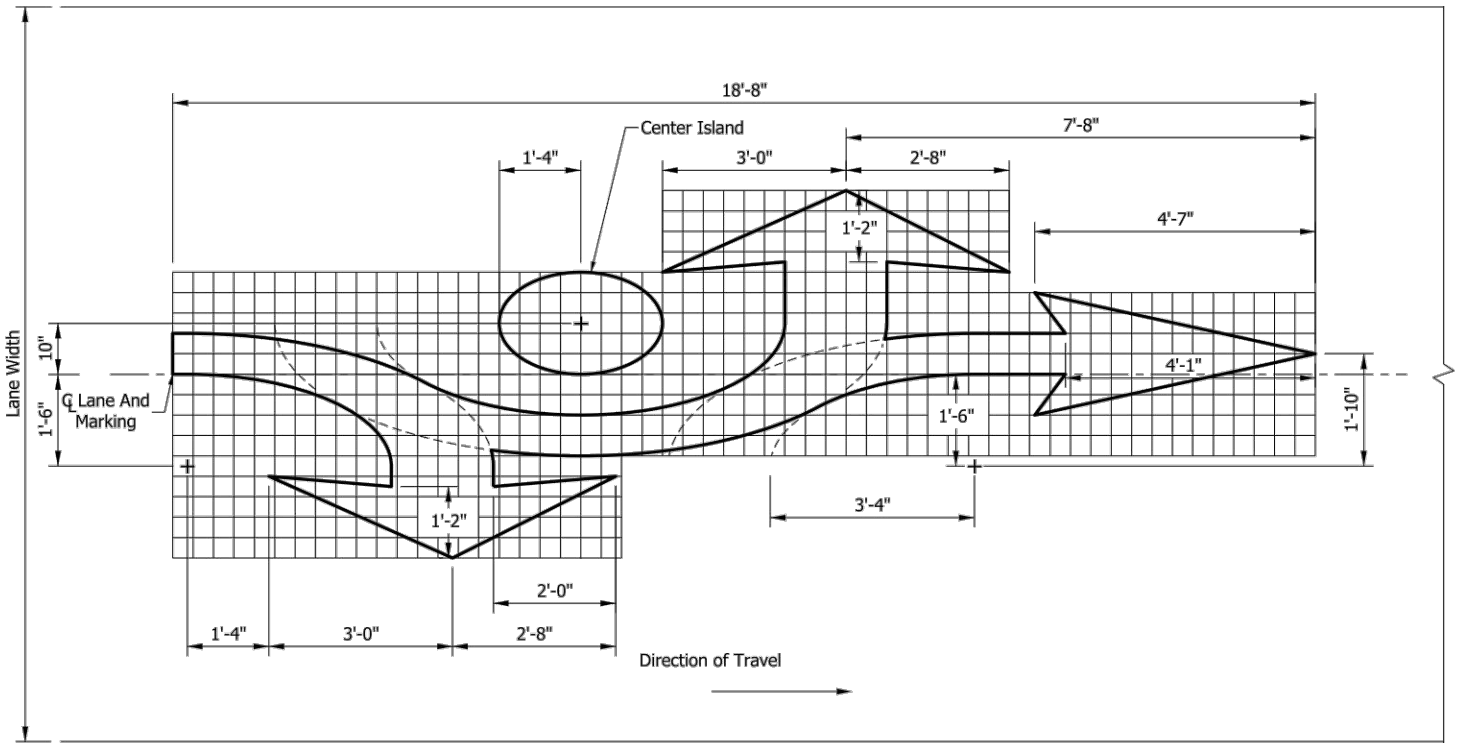

FISHHOOK LANE INDICATION ARROW DETAIL

NO SCALE

NOTES:

1. EACH ROUNDABOUT TRAFFIC ARROW PAVEMENT MARKING SHALL BE CENTERED IN THE TRAVEL LANE.
2. THE GRID LINES ARE 4" APART.
3. REFER TO INDOT STANDARD DRAWING E-808-MKPM-01 FOR TRAFFIC ARROW QUANTITIES.

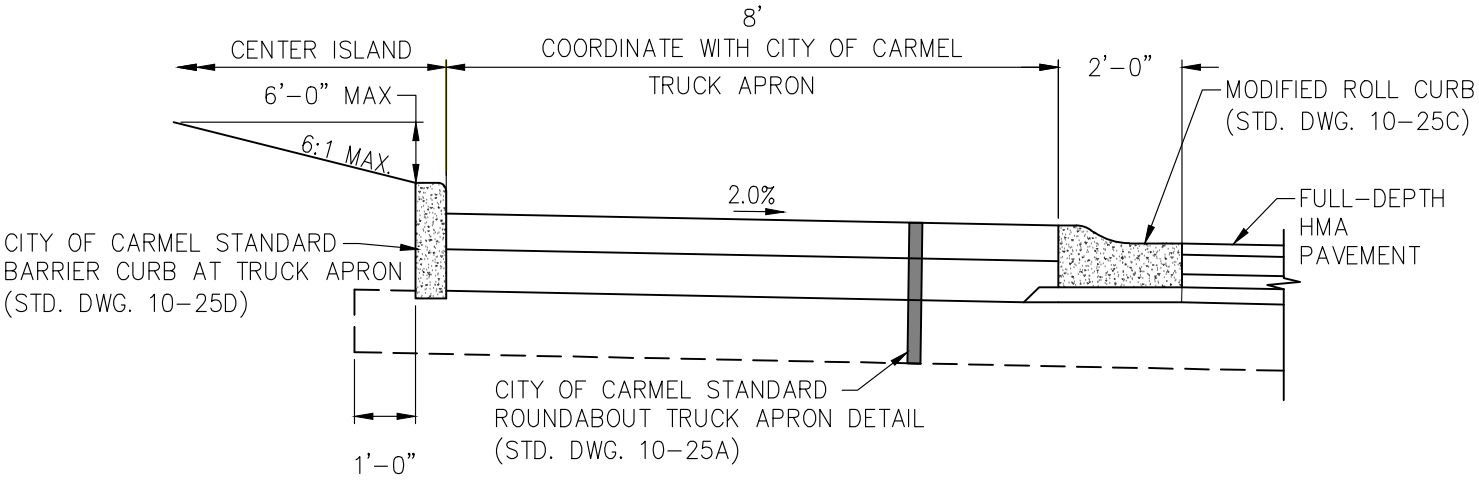

CONCRETE TRUCK APRON DETAIL

NO SCALE

STANDARD DRAWING 10-50	CITY OF CARMEL STANDARDS
	STANDARD ROUNDABOUT DESIGN – MISCELLANEOUS DETAILS

NOT TO SCALE

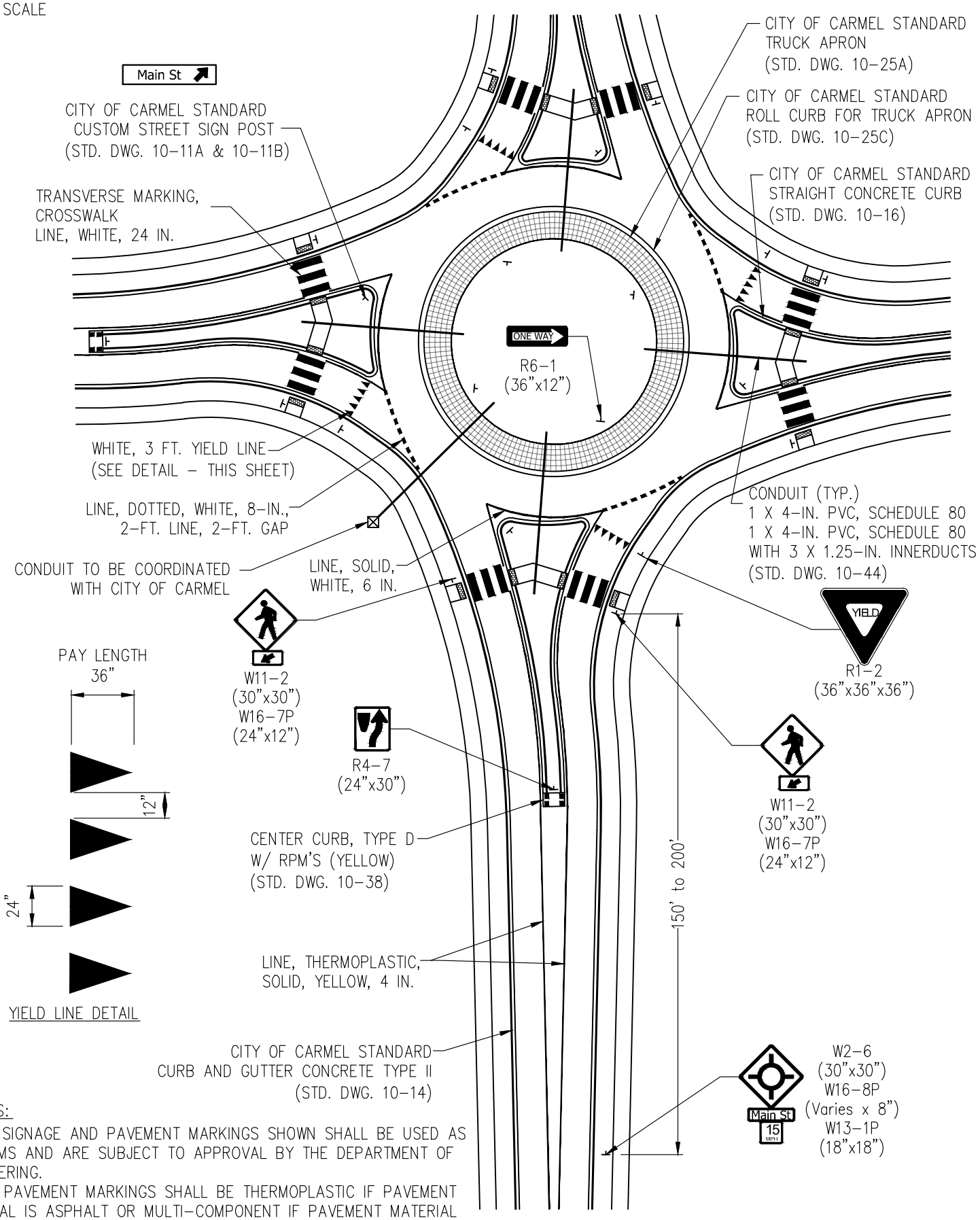

NOTES:

1. ALL SIGNAGE AND PAVEMENT MARKINGS SHOWN SHALL BE USED AS MINIMUMS AND ARE SUBJECT TO APPROVAL BY THE DEPARTMENT OF ENGINEERING.
2. ALL PAVEMENT MARKINGS SHALL BE THERMOPLASTIC IF PAVEMENT MATERIAL IS ASPHALT OR MULTI-COMPONENT IF PAVEMENT MATERIAL IS CONCRETE.

STANDARD DRAWING 10-51	CITY OF CARMEL STANDARDS
	STANDARD ROUNDABOUT DESIGN - SINGLE LANE DETAILS

NOT TO SCALE

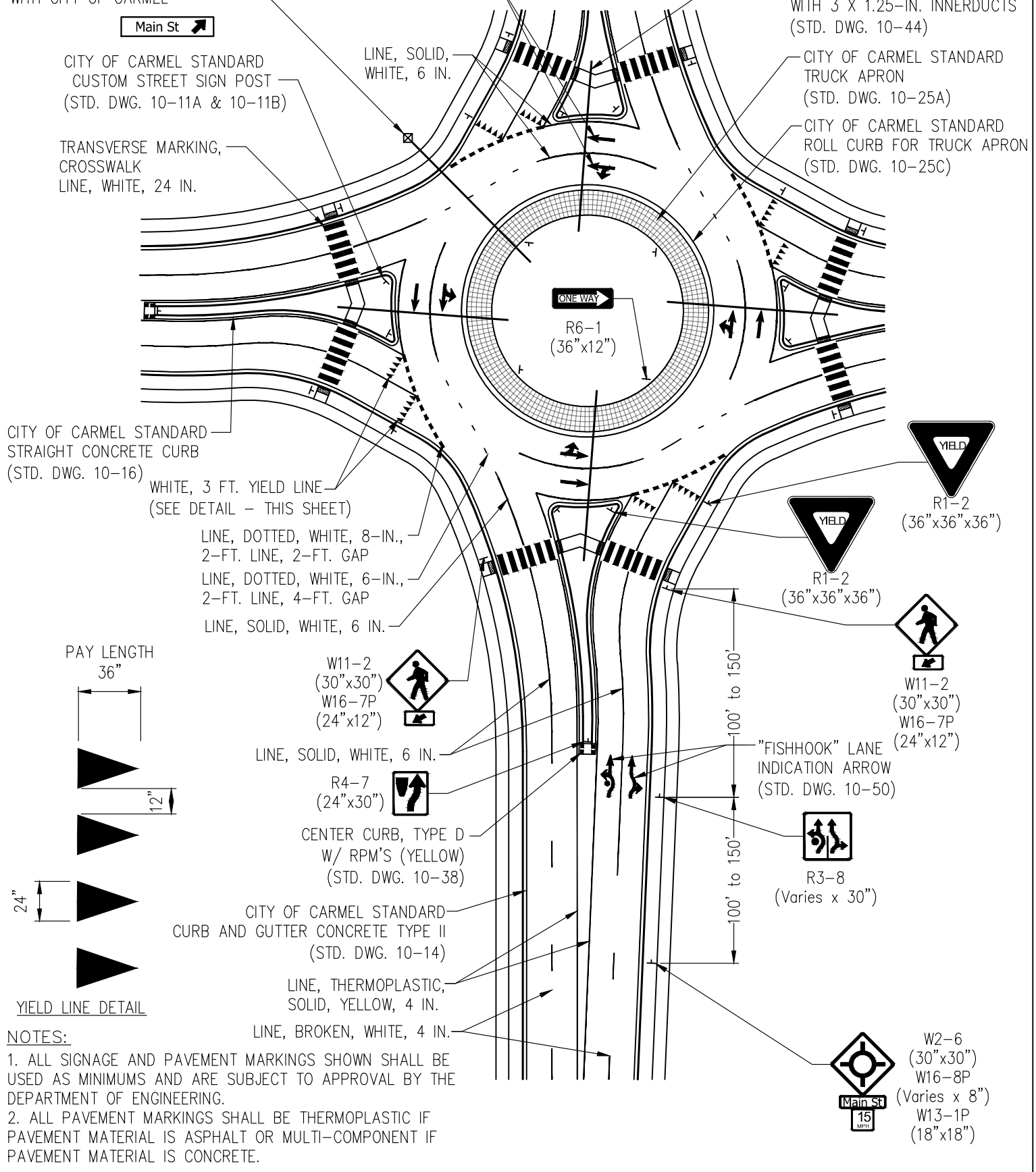

NOTES:

1. ALL SIGNAGE AND PAVEMENT MARKINGS SHOWN SHALL BE USED AS MINIMUMS AND ARE SUBJECT TO APPROVAL BY THE DEPARTMENT OF ENGINEERING.
2. ALL PAVEMENT MARKINGS SHALL BE THERMOPLASTIC IF PAVEMENT MATERIAL IS ASPHALT OR MULTI-COMPONENT IF PAVEMENT MATERIAL IS CONCRETE.

STANDARD DRAWING 10-52	CITY OF CARMEL STANDARDS
	STANDARD ROUNDABOUT DESIGN - MULTI-LANE DETAILS

NOT TO SCALE

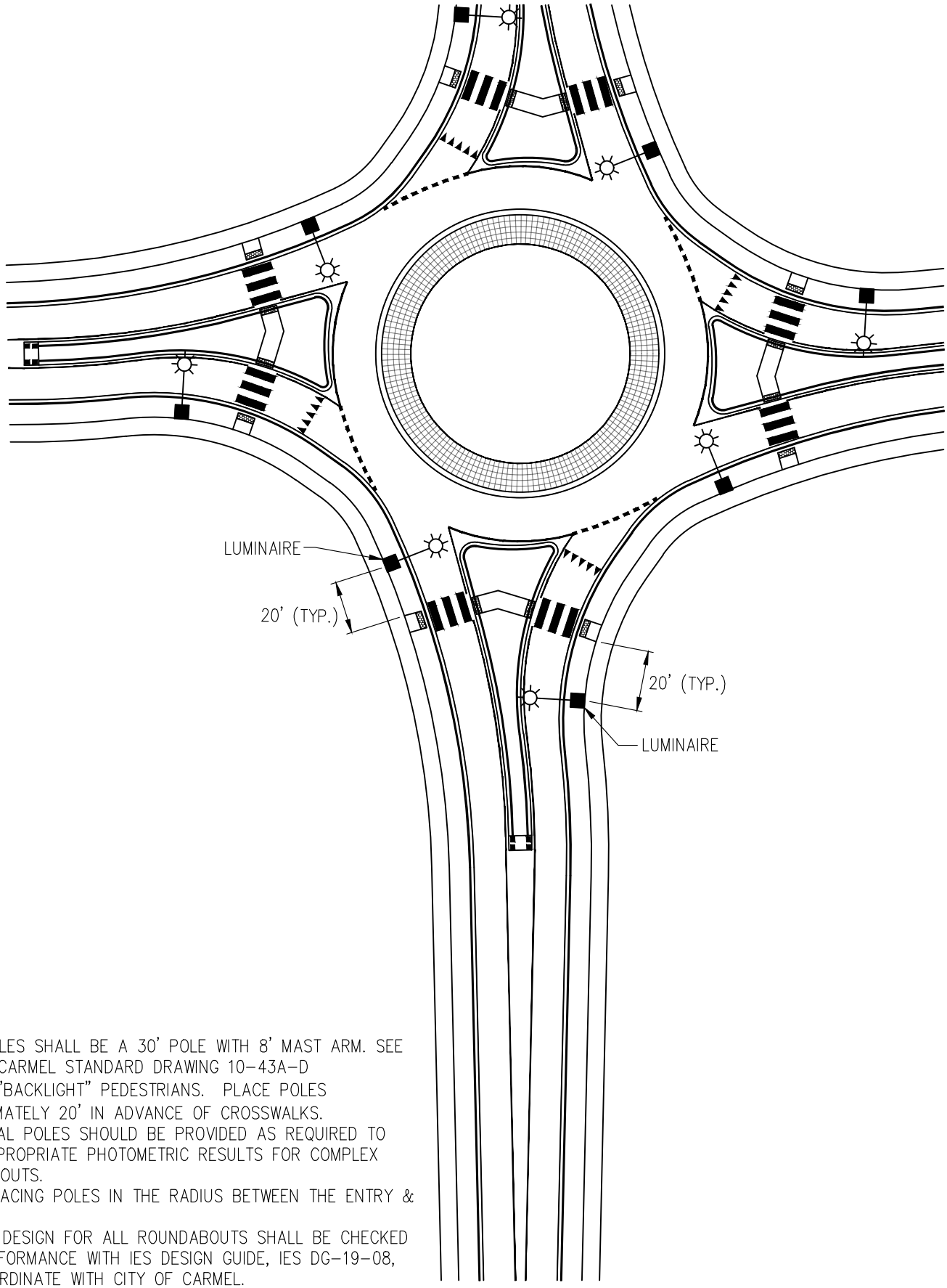

Notes:

1. LIGHT POLES SHALL BE A 30' POLE WITH 8' MAST ARM. SEE CITY OF CARMEL STANDARD DRAWING 10-43A-D
2. DO NOT "BACKLIGHT" PEDESTRIANS. PLACE POLES APPROXIMATELY 20' IN ADVANCE OF CROSSWALKS.
3. ADDITIONAL POLES SHOULD BE PROVIDED AS REQUIRED TO MEET APPROPRIATE PHOTOMETRIC RESULTS FOR COMPLEX ROUNDABOUTS.
4. AVOID PLACING POLES IN THE RADIUS BETWEEN THE ENTRY & EXIT.
5. LIGHTING DESIGN FOR ALL ROUNDABOUTS SHALL BE CHECKED FOR CONFORMANCE WITH IES DESIGN GUIDE, IES DG-19-08, AND COORDINATE WITH CITY OF CARMEL.

STANDARD DRAWING 10-53	CITY OF CARMEL STANDARDS
	STANDARD ROUNDABOUT DESIGN – ROUNDABOUT LIGHTING