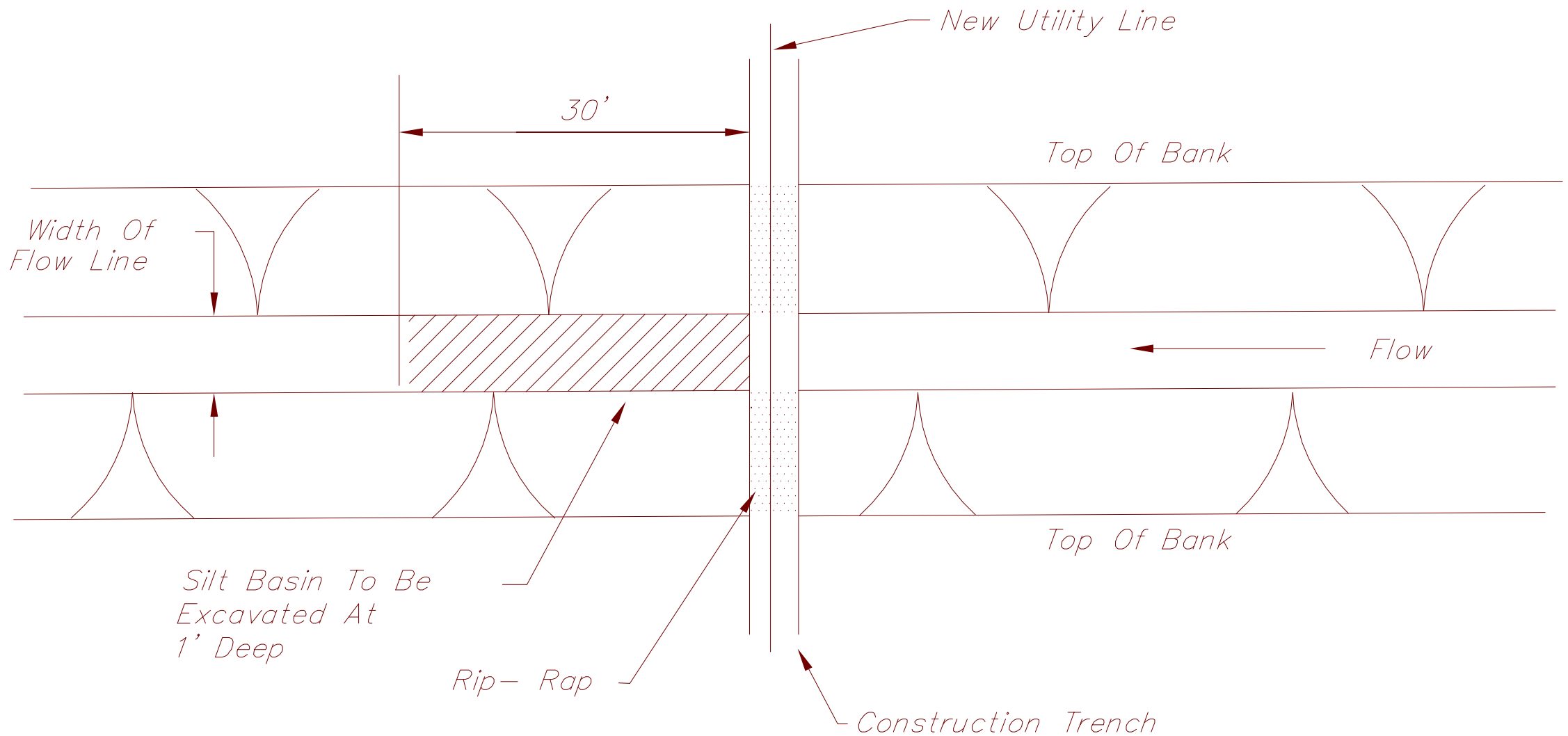

CITY OF CARMEL STANDARD DETAILS		TITLE: STREAM CROSSING PLAN VIEW	
Date: March 2001	Scale: Not To Scale	Drawn By: Jones & Henry Engineers, Inc.	Drawing Name: CW2